150 KING STREET WEST

BUILDING MANAGEMENT PLAN

Some items and details are yet to be completed and will be updated from time to time. BentallGreenOak will provide updated versions of this manual to all tenants upon request.

BentallGreenOak

July 2019

150 King Street West

Table of Contents

APPENDICES

Executive Summary

The following Building Management Plan (the "**Plan**") has been designed to provide tenants of 150 King Street West (the "**Building**") with a comprehensive document containing all operating practices that will impact their tenancy at the Building.

This Plan has been divided into 4 main themes:

1. Design Approvals and Mandatory Construction Practices
2. Rules and Regulations Regarding Work
3. Base Building Design Information
4. Sustainable Building Operating Practices

BentallGreenOak (Canada) Limited Partnership ("**BentallGreenOak**") and Sun Life Assurance Company of Canada (the "**Landlord**") are committed to good stewardship in tenant design and protecting both internal and external environments. This Plan is intended to provide tenants with a framework for contributing toward the Landlord's goal of reducing the Building's overall environmental footprint. This Plan will also outline specific operating practices presently undertaken at the Building to achieve this goal.

The Building is a LEED-EB: O&M (Leadership in Energy and Environmental Design for Existing Buildings Operations & Maintenance) registered project and is certified LEED EB Gold. In keeping with its commitment to operating high quality, efficient and sustainable buildings, the Landlord encourages tenants to become familiar with the principles of LEED and to strongly consider constructing tenant improvements to the LEED CI standards. In doing so the tenant will not only be co-operating with the Landlord and BentallGreenOak in minimizing the Building's environmental footprint, the tenant will also realize the full value of leasing a LEED certified building.

Many of the mandates contained in this Plan conform to the principles established by the Canadian Green Building Council for LEED EB O&M. The LEED Canada EB:O&M 2009 rating system helps building owners and operators measure operations, improvements and maintenance on a consistent scale, with the goal of maximizing operational efficiency, while minimizing environmental impacts. LEED Canada EB:O&M 2009 addresses whole-building cleaning and maintenance issues (including chemical use), recycling programs, exterior maintenance programs, and systems upgrades.

SECTION 1.0 DESIGN APPROVALS AND MANDATORY CONSTRUCTION PRACTICES

1.1 Introduction

This Plan contains general information, procedures and requirements which have been established by BentallGreenOak, as manager for the Landlord, to (i) assist tenants in the design and construction of their improvements within their premises; and (ii) notify tenants of the design specifications for the Building. While this Plan is intended to reflect the general case, to the extent there is a conflict between any specific written agreement between the Landlord and any tenant (such as, a lease), the provisions of such specific written agreement will prevail.

It is recommended that the tenant and/or its designer and/or its space planner review any available drawings for, and visit, the premises to inspect and verify all site conditions prior to commencing any design work.

All drawings including, but not limited to, space plans, architectural, structural, mechanical and electrical drawings, must be approved, in writing, by the Landlord prior to the commencement of any work in the premises by or on behalf of the tenant.

1.2 Tenant Coordination

The Operations Manager for the Building shall serve as tenant coordinator to:

(a) provide guidance and assistance to tenants throughout the design and construction of their improvements within their premises;

(b) review, comment upon, and approve all tenant submissions prior to allowing the commencement of any work within the premises; and

(c) act as the liaison between the Landlord, the tenant, the tenant's contractor and the tenant's designer (collectively, the "**Tenant's Contractor**"). For greater certainty, except where expressly indicated herein to the contrary, the term "Tenant's Contractor" includes the tenant's general contractor, engineers, designers, suppliers, all sub-contractors and any other entities engaged by tenant in connection with the completion of the Work (as hereinafter defined).

All questions, comments and submissions relative to tenant coordination are to be addressed to:

Steve Ellis, Operations Manager
BentallGreenOak
150 King Street West
Suite 101, P.O. Box 77
Toronto, ON M5H 1J9
T: 416-205-4701 F: 416-977-5545
Email: sellis@bentallgreenoak.com

General questions or concerns related to matters other than tenant construction should be addressed to:

Marcie Sherwood, General Manager
BentallGreenOak
150 King Street West, Suite 101, P.O. Box 77
Toronto, ON M5H 1J9
T: 416-205-8252 F: (416) 977-5545
Email: msherwood@bentallgreenoak.com

Josephine Cho, Assistant Property Manager
BentallGreenOak
150 King Street West, Suite 101, P.O. Box 77
Toronto, ON M5H 1J9
T: 416-205-4713 F: (416) 977-5545
Email: jcho@bentallgreenoak.com

1.3 Amendments by Landlord

The Landlord reserves the right, from time to time, to add or amend the information procedures and regulations contained herein. Any such additions or amendments will affect any work undertaken by or on behalf of the tenant after such addition or amendment has been issued.

1.4 Base Building Construction

(a) Upon request, the Landlord will provide the tenant with drawings of the premises indicating the major elements of the base building structure and systems (the "**As-Builts**") to assist the tenant in the production of working drawings for any work which the tenant intends to have completed within the premises. Additional drawings or information which the tenant may reasonably require for this purpose may be obtained from the Operations Manager at the tenant's expense.

(b) Except as otherwise provided herein or in any other written agreement between the tenant and the Landlord, the tenant shall not make any repairs, replacements, changes, additions, improvements or alterations ("Work") to or within the premises without obtaining the Landlord's prior written consent thereto, which consent will not be unreasonably withheld.

(c) The Landlord shall not be obliged to consider any request for such approval unless and until the tenant has submitted to the Landlord: (i) details of the proposed Work, including permit-ready plans, drawings and specifications, which have been prepared by qualified architects, engineers or other consultants who have been selected by the tenant and approved by the Landlord, acting reasonably, in writing, and all of which conform to good architectural, engineering or other professional practice, all as more particularly set forth in Section 1.6 below; (ii) evidence satisfactory to the Landlord (written confirmation of which shall be delivered from the Landlord to the tenant) that the tenant has obtained all necessary consents, permits, licenses and inspections from all governmental and regulatory authorities having jurisdiction there over; and (iii) certificates of insurance from the Tenant's Contractor in accordance with the provisions of Section 1.9 below.

(d) All Work made, and trade fixtures installed, by the tenant to or within the premises shall be at the tenant's sole cost and expense and, if approved by the Landlord, shall be performed:

(i) by the Tenant's Contractor, who shall be subject to Landlord's prior written approval, not to be unreasonably withheld, and who shall be compatible with the labour affiliation, if any, of the Landlord's contractors and workers (it being hereby understood and agreed that any Work required to finish space for initial occupancy after construction must be completed using contractors who are affiliated with the United Brotherhood of Carpenters and Joiners Union);

(ii) in a good and workmanlike manner and in keeping with the first class standard within the Building;

(iii) subject to the reasonable controls and inspection of the Landlord and/or its designated contractor;

(iv) in accordance with the drawings and specifications approved by the Landlord in accordance with subsection 1.4(c) above; and

(v) in accordance with all applicable Laws and the requirements of the Landlord's insurers.

(e) The tenant shall pay to the Landlord any reasonable out-of-pocket costs actually incurred by the Landlord for review of tenant's drawings and specifications and in connection with inspecting the Work.

(f) The tenant, the Tenant's Contractor, and their employees and agents will not: (i) enter onto the roof of the Building or make any opening in the roof; (ii) drill or cut openings for conduit or pipe sleeves, or chases for ducts or equipment in the floors, columns, walls, ceilings, roof or structure of the Building; (iii) vary or alter in any manner whatsoever any plumbing, electrical or mechanical systems, or RF shielding and suppression measures of the Building or any of their components, whether or not located within the Building. Any such work required by the tenant, if approved by the Landlord, will be performed by the Landlord at the tenant's expense.

(g) Any proposed Work that may, in the Landlord's opinion: (i) affect the roof; (ii) require any drilling into floors, walls or ceiling; (iii) affect the structure of the Building or any base building systems therein, shall be performed by the contractor designated by the Landlord, and utilize only such consultant(s) as may be designated by the Landlord. No such Work shall be permitted which may materially weaken or endanger the structure or adversely affect the condition or operation of the Premises or the Building or diminish the value thereof.

(h) Any Work made by or on behalf of the tenant without the prior written consent of the Landlord, or which is not substantially in accordance with the drawings and specifications approved by the Landlord, shall, if required by the Landlord, promptly be removed by the tenant, or, at the Landlord's option, shall be promptly modified to conform to such approved drawings and specifications, all at the tenant's sole cost and expense. If the tenant does not promptly remove or otherwise modify such Work within a reasonable period of time following Landlord's written request therefor, the Landlord may do so and the tenant shall pay to the Landlord on demand all costs incurred by the Landlord in connection therewith.

(i) For any Landlord Work over $100,000, please refer to CCDC2-2008 – Supplementary Conditions for this site – see Appendix D for more information.

1.5 Tenant Design Consultants

The tenant, at its own expense, shall retain qualified professional consultants, which consultants shall be subject to the prior written approval of the Landlord.

The Landlord encourages the use of its base building consultants due to their familiarity with the base building design. Engineering drawings produced by non-base building consultants will be reviewed by the base building consultants at the tenant's expense. All changes recommended by the Landlord or its consultants must be included in the final specifications and drawings. When non-base building engineering consultants are used, the Landlord will commission the base building consultants to conduct site inspections of all work, at the tenant's expense.

All architectural, structural, mechanical and electrical changes or any other modifications by the tenant will be subject to the Landlord's prior written approval and will be maintained on building file drawings by the base building consultants. When tenant-initiated engineering work is undertaken by consultants which are not the base building consultants, the tenant shall pay to the Landlord the additional costs incurred by the Landlord in transferring information from the tenant drawings to the building file drawings.

BASE BUILDING CONSULTANTS

ACOUSTICAL CONSULTANT	
HGC Engineering Limited 2000 Argentia Road, Plaza 1, Suite 203 Mississauga, Ontario L5N 1P7 Contact: Mr. Brian Howe Telephone: (905) 826-4044 ext. 224	
ARCHITECTURAL DESIGN	
Brisbin Brook Beynon Architects 14 Duncan Street, 4th floor Toronto, ON M5H 3G8 Contact: Mr. Greg Alexander Telephone: 416-891-8999	**Connect Resource Planners** 504 Iroquois Shore Rd, Unit #4 Oakville, Ontario L6H 3K4 Contact: Ms. Lydia Pickering Telephone: 905-338-5465
Dialog 2 Bloor Street East, Suite 1000 Toronto, ON M4W 1A8 Contact: Ms. Marilyn White Telephone:416-966-0220	**Henata Ko Design** 12 Deanecrest Road Etobicoke, ON, M9B 5W4 Contact: Ms. Henata Ko Telephone: 647-297-7372
Williams Craig Design 38 Ossington Avenue Toronto, Ontario M6J 2Y7 Contact: Ms. Karen Williams or Ms. Joelle Craig Telephone: 416-516-3203	

ARCHITECTS	
Webb Zerafa Menkes Housden Partnership 99 Yorkville Avenue Toronto, Ontario M5R 1C1 Contact: Mr. Hady Lotfy Telephone: 416-961-4111	**B&H Architects** 481 University Avenue, Suite 300 Toronto, Ontario M5G 2H4 Contact: Mr. Guy Painchaud Telephone: 416-596-2299
ELECTRICAL CONSULTANT	**MECHANICAL CONSULTANT**
Smith & Andersen Consulting Engineering 4211 Yonge Street, Suite 500 Toronto, Ontario M2P 2A9 Contact: Mr. Vlad Germanovsky Telephone: 416-487-8151	**Smith and Anderson Consulting Engineering** 4211 Yonge Street, Suite 500 Toronto, Ontario, M2P 2A9 Contact: Mr. Vlad Germanovsky Telephone: 416-487-8151
STRUCTURAL CONSULTANT	**RISER WORK (MANDATORY)**
Stephenson Engineering Ltd. 2550 Victoria Park Avenue, Suite 602 Toronto, Ontario, M2J 5A9 Contact: Mr. Peter McAteer Telephone: 416-635-9970 ext. 184	**The Attain Group Inc.** 1 Yonge St., Suite 1801, Toronto, Ontario M5E 1W7 Contact: Mr. Doug Hanson Telephone: 647-965-9424

1.6 Tenant Design and Working Drawings

Any drawings or information which the tenant may reasonably require in connection with any Work proposed for the Premises, in addition to the As-Builts, may be obtained from the Landlord, at the tenant's expense.

The tenant is responsible for the production of accurate and complete working drawings for any Work proposed within the premises. Although the Landlord will supply the tenant with the As-Builts, neither the Landlord nor BentallGreenOak shall be responsible for same and the tenant must verify the as-built condition prior to commencement of the tenant design.

The tenant must submit to the Landlord for written approval four (4) sets of prints for all Work proposed for the premises. One (1) set of drawings will be returned to the tenant bearing the Landlord's stamp of approval; such approval may be subject to changes requested by the Landlord. For the purpose hereof, the drawings approved without changes by the Landlord shall be the "**Approved Drawings**". Any revision to the Approved Drawings must be submitted to the Landlord for its prior written approval.

The design of the Work will determine the appropriate nature and depth of working drawing detail and the Landlord may find it necessary to request certain additional or expanded information, for the purpose of definition or clarification, before approval is given. The following is a general list of items of information to be included in the working drawings:

(a) Floor Plans:

(i) Drawing scale of 1:100.

(ii) Locations of all major fixed elements within the premises, dimensionally related to grid lines and demising partitions.

(iii) Locations and layouts of rooms and unusual loading concentrations, such as centralized filing areas, vaults, etc.

(iv) Location of power and outlets.

(v) Location of plumbing fixtures.

(vi) Furniture plan with room names or uses.

(vii) Floor and wall materials and all finishes throughout the premises.

(viii) Location of inter-floor stairs, if any (subject to prior approval by the Landlord's base building structural engineer).

(ix) Where the premises occupy less than a full floor, a drawing of the entire floor showing the location of the premises and its relationship to the elevator, lobby, exits and washrooms.

(b) Reflected Ceiling/Lighting Plan:

(i) Drawing scale of 1:100.

(ii) Lighting layout, ceiling pattern, materials and suspension system definition.

(iii) Types and wattage of any proposed special light fixtures.

(iv) Locations of any sound baffles above the ceiling.

(v) Location of any access panels required to service building systems.

(vi) Location of sprinkler heads and relocated heads.

(c) Construction details, at suitable scales, indicating all methods of construction.

(d) Complete electrical, mechanical, sprinkler, building automation and life safety system drawings, at a scale of 1:100, should indicate work which is an alteration, or an addition, to the base building work, as well as base building work which remains unchanged. Indicate tie-ins and extensions to the base building security and communications systems, plumbing systems and heating, ventilating and air conditioning and humidity control ("**HVAC**") systems. Heat generating equipment and their output calculations (including heat gain/loss) will be required on mechanical drawings. Fixtures and equipment (e.g., VAV boxes, reheat coils, thermostats) must be compatible with those of the base building.

(e) Structural drawings, at suitable scales (minimum 1:100), where special conditions warrant the production of such drawings, e.g., openings in floor slabs, floor depressions, floor reinforcement for vaults and filing systems, etc.

(f) Hardware Schedule must be submitted.

(g) Architectural, mechanical and electrical specifications.

1.7 Standard for Tenant Design

Reducing the environmental footprint of the Building starts with good design practices. From this foundation, there are a number of specific materials and construction practices that will need to be imbedded into the construction contracts to ensure the best possible outcome is achieved. Key principles that tenants must incorporate into their design plans include: (i) the minimization of construction waste; (ii) limitations on the use artificial light and minimization of the use of inefficient lighting designs; (iii) minimization of inefficient plumbing fixtures that consume excessive volumes of water. This Plan also contains an overview of the base building operating standards that have been designed to minimize the Building's impact on the environment.

Tenants' designers are requested to consider the following points in their design:

(a) Review the existing leasehold improvements and reuse existing improvements where feasible.

(b) Use high efficiency lighting for all specialty lighting. Use of incandescent lighting is discouraged and lighting levels in excess of 55 foot candles are not permitted unless such use has received the prior written approval of the Landlord.

(c) Occupancy sensors are recommended for private offices and boardroom such that the lights may be turned off during unoccupied times.

(d) The design of the premises should maximize light penetration into the interior spaces with a goal of achieving day lighting into 75% of the space.

(e) All waste generated during the construction must be separated and removed from site in a manner that maximizes the recycling of construction debris. At minimum, carpet, metal, ceiling tiles and gypsum board should be recycled.

(f) All carpets should have a minimum of 25% recycled content and meet *Carpet and Rug Institute's ("**CRI**") Standard (Green Label Plus Program)* for indoor air quality and be installed using CRI certified low volatile organic compound ("**VOC**") "quick release" adhesives. Carpets which are eligible for 6ix Again ® closed loop recycling program are preferred.

(g) Latex based paints are preferred. Latex paints should have a maximum VOC of 200 grams per litre, and solvent based paints must have a maximum VOC of 380 grams per litre. Use of paints containing formaldehyde, halogenated aromatic solvents or heavy metals is strictly prohibited.

(h) Use of base building ceiling tiles is to be maintained in all areas except where such use has received the prior written approval of the Landlord.

(i) Use of air conditioning units that use domestic water as a source of cooling are not permitted unless such use has received the prior written approval of the Landlord.

(j) Use of Lutron controls, shades and light fixtures.

1.8 Permits

All Work completed by or on behalf of the tenant in the premises, including the design thereof, and all plans, drawings, and specifications associated therewith, must be completed in accordance, and must comply, with all applicable laws, by-laws and regulations in effect, and the tenant must obtain all requisite permits, approvals and licenses from all the appropriate authorities, and provide copies of same to the Landlord, prior to the commencement of any Work in the premises.

Any Work which does not meet with the approval of the City of Toronto Building Inspector ("**Inspector**"), notwithstanding that the plans and drawings therefore may be Approved Drawings, shall be remedied by the tenant, at its sole cost and expense, immediately upon receipt of notice thereof from the Inspector. It is important to note that the Landlord's review of tenant drawings is no assurance of code compliance. Any revisions to the Approved Drawings requested by the Inspector (or any other authority having jurisdiction there over) must be copied to the Landlord. If the tenant has not commenced to remedy any deficiencies cited by the Inspector within ten (10) business days following issuance of the Inspector's notice, such deficiencies may be completed by the Landlord at the tenant's sole cost and expense.

1.9 Insurance

Prior to commencing any Work, the tenant and the Tenant's Contractor must provide to the Landlord certificate(s) of insurance coverage, with a minimum five million dollars ($5,000,000), satisfactory to the Landlord, evidencing coverage which shall, at minimum, include: (i) all insurance required to be carried by tenant as set out in any separate written agreement between the tenant and the Landlord; (ii) Contractor's Insurance; and (iii) verification that the Tenant's Contractor is in good standing with the Workplace Safety and Insurance Board of Ontario

BentallGreenOak must be listed as co-insured on the policy as follows:

"Sun Life Assurance Company of Canada, 150 King Street West, Bentall Property Services (Ontario) Ltd., BentallGreenOak (Canada) Limited Partnership, BentallGreenOak (Canada) G.P. Ltd., their successors and assigns"

1.10 Lien Protection

The tenant shall make all such payments, and take all such steps as may be necessary, to ensure that no lien or other charge or claim therefor or certificate of action in respect thereof (any of which is herein referred to as "Lien") is registered against the Building, the lands on which the Building are situate, or any portion thereof, or against either the Landlord's or the tenant's interest therein, as a result of any Work. The tenant shall cause any such registrations to be discharged or vacated immediately after notice from the Landlord, or within ten (10) days after registration, whichever is earlier.

1.11 Appointment of Contractors

In addition to any other requirements expressly herein provided, the Tenant's Contractor:

(a) must utilize the Landlord's base building contractors for any Work affecting the fire alarm, automation, sprinkler and air balancing systems located within or serving the premises; and

(b) must comply with the terms of the *Occupational Health and Safety Act* (Ontario) ("**OHSA**").

The following is a list of recommended contractors that are familiar with the operation of the Building:

BUILDING AUTOMATION SYSTEM (MANDATORY)	
Johnson Controls Canada 56 Leek Crescent Richmond Hill, ON L3B 1H1 Contact: Ms. Jacqueline Manitaros Telephone: 416-333-2664	
ELECTRICAL CONTRACTORS	
Campbell Kennedy Electric 242 Applewood Crescent, Unit 11 Concord, Ontario L4K 4E5 Contact: Mr. John Roman Telephone: 905-761-8550	**Guild Electric Ltd.** 470 Midwest Road Toronto, Ontario M1P 4Y5 Contact: Mr. Colin Reid Telephone: 416-288-8222
Plan Group 2740 Steele Ave W. Vaughan, ON L4K 4T4 Contact: Brad Herring Telephone: 416-432-7327	**Smith & Long Ltd** 91 Esna Park Drive, Unit 3 Markham, Ontario L3R 2S2 Contact: Mr. Kyle Bunte Telephone: 416-391-0443
FIRE ALARM SYSTEM (MANDATORY)	**LIGHTING CONTROLS (MANDATORY)**
JD Collins Fire Protection Company Inc. 101 Innovation Drive, Unit 1 Woodbridge, Ontario L4H 0S3 Contact: Mr. Dan Madden Telephone: 905-660-4535 ext.216	**Lutron Electronics Co. Inc.,** 600 Cochrane Dr, Markham, ON L3R 5K3 Markham, Ontario L3R 5K3 Contact: Mr. Robert Bozzo Telephone: 905-754-3300
Plan Group 2740 Steele Ave W. Vaughan, ON L4K 4T4 Contact: Brad Herring Telephone: 416-432-7327	
MECHANICAL CONTRACTORS	
Applied Systems Technologies Inc. 910 Rowntree Dairy Rd., Unit 5 Woodbridge, ON. Canada L4L5W4 Contact: Mr. John Pereira or Mr. Rico Taraschi Telephone: 905-850-7080	**CMS Commercial Mechanical Services Ltd.** 2721 Markham Rd. Unit #10 Scarborough, ON M1X 1L5 Contact: David Newland Telephone: 416-609-9992 x.66

Modern Niagara Toronto 695 Flint Road Toronto, Ontario M3J 2T7 Contact: Mr. Jim Warner Telephone: 416-749-6031	
METERING (MANDATORY)	
CARMA Industries Inc. 1 Dundas Street West, Suite 2304 Toronto, Ontario M5G 1Z3 Contact: Chris Jurtovski Telephone: 416-260-4264	
SPRINKLERS (MANDATORY)	
Classic Fire Protection 645 Garyray Drive. North York, Ontario. M9L 1P9 Contact: Mr. Mario Iaboni Telephone: 416-740-3000	**JD Collins Fire Protection Company Inc** 101 Innovation Drive, Unit 1 Woodbridge, Ontario L4H 0S3 Contact: Mr. Dan Madden Telephone: 905-660-4535

1.12 Commencement of Construction

The tenant must carry out all Work in strict accordance with the Approved Drawings.
All work is to be performed after business hours. No work is to be performed between the hours of 7:00 a.m. and 6:00 p.m.

In addition to any other requirements expressly herein provided, prior to commencing any Work, the tenant shall:

(a) post all required permits on site; Building Permit, Electrical Building Permit and Mechanical Building Permit;

(b) have received Approved Drawings and written notice from the Landlord to proceed with construction;

(c) make available on the premises a set of prints of the Approved Drawings for the duration of the construction period for reference by the Landlord's authorized representatives;

(d) submit to the Landlord a schedule showing the approximate timetable for the progress and completion of the Work;

(e) provide deficiency deposit in the form of a certified cheque for up to $10,000.00 (depending on the size and scope of the project). This cheque must be made payable to the "***BentallGreenOak (Canada) Limited Partnership itf Sun Life Assurance Company of Canada".*** The cheque will be returned to Contractor upon the rectification of all deficiencies to the satisfaction of the Landlord, acting reasonably. Should deficiencies not be completed after 30 days of Substantial Completion, the Landlord will use cheque to complete deficient work on Tenant's behalf;

(f) provide evidence, in a form acceptable to the Landlord, that the Contractor has at least $5 million worth of general liability insurance. The insurance coverage must name as additional insured parties:

• Sun Life Assurance Company of Canada, 150 King Street West, Bentall Property Services (Ontario Ltd., BentallGreenOak (Canada) Limited Partnership, BentallGreenOak (Canada) G.P. Ltd., their successors and assigns

All General Contractors must ensure that their policies cover all work performed by their sub-trades. Any other Contractor working directly for a Tenant and requiring access to common areas (telephone rooms, riser rooms, mechanical room, etc.) must likewise provide acceptable evidence of adequate insurance coverage.

The requirement for $5 million in General Liability Insurance applies to all parties requiring access to common areas (riser rooms, mechanical rooms, telephone rooms etc.) aside from the General Contractor requirements.

(g) All General Contractors must provide a copy of their Health & Safety Policies, and a letter which indicates that their policy will blanket all sub-trades;

(h) submit a copy of the Notice of Project forms;

(i) submit WSIB Clearance Certificate;

(j) provide a comprehensive list of all trades that will work on the project, including emergency contact information for each trade (i.e. cellular phone numbers);

(k) If a company is a subsidiary of another firm, proof of adequate insurance must be provided in the form of either:
• An actual Certificate of Insurance as outlined above, or;
• A letter and Certificate of Insurance from the parent firm indicating acceptance of responsibility for the subsidiary's work.

(l) The project's Project Manager must contact the property management office to arrange a kick-off meeting and health & safety meeting (with the Landlord/Landlord Agent present) prior to construction commencement, for formal introductions to the project team;

(m) For all project work at 150 King St. West, the tenant must employ union affiliated contractors, subcontractors, etc., and ensure that the work performed by each unionized trade does not conflict with that of other unionized trades legally entitled to do so by virtue of their collective agreements. The tenant is solely responsible for all damages (and associated repair costs) that may result from its Contractors' failure to comply with this requirement.

1.13 Completion of Work

Forthwith, upon completion of the Work, the tenant must submit to the Landlord:

(a) a statutory declaration from the tenant's architect or designer, addressed to the Landlord, stating that all Work, including that of the mechanical and electrical divisions, has been completed in accordance with the Approved Drawings;

(b) a full set of architectural, mechanical and electrical "as-built" drawings which shall include one (1) printed copy and one (1) CAD copy of the “as-built” drawings;

(c) copies of all permits and certificates issued by authorities having jurisdiction over all or any part of the Work;

(d) a statutory declaration by a signing officer of the tenant, to be issued after the expiry of all applicable lien periods, confirming that the Work has been completed, the date of such completion, that all accounts relating to the Work have been paid, that no lien has or may be claimed with respect thereto, and that all construction lien periods have expired;

(e) evidence, satisfactory to Landlord, acting reasonably, that all building permits related to the Work have been properly satisfied and closed.

All elements of the base building which are removed from the premises in accordance with the Approved Drawings, including, but not limited to, light fixtures, doors and frames, hardware, etc., shall remain the property of the Landlord and must be delivered and turned over to the Landlord upon removal; the Landlord reserves the right to have such base building items re-installed in the premises, by the tenant at its sole cost and expense, upon the expiry or earlier termination of any lease between the tenant and the Landlord.

Upon completion of the Work, the premises must be left clean and in a "move-in" condition, all to the satisfaction of the Landlord as per Section 2.37.

1.14 Construction Checklist

Upon completion of the Work, the tenant, through its Tenant’s Contractor, must complete the Construction Checklist forming part of this Plan.

1.15 Landlord Charges

In connection with the Work, and in addition to any costs expressly stated herein, the tenant shall pay to the Landlord:

(a) fifteen percent (15%) of such costs as Landlord’s administration and overhead;

(b) any other supervision and administration fees payable in accordance with any other written agreement between the parties relating to the premises and the completion of Work therein, including, without limitation, any lease between the parties.

All amounts payable by the tenant pursuant hereto shall be deemed “additional rent” for the purposes of the lease between the Landlord and tenant in respect of the premises and shall be payable by the tenant forthwith upon demand.

SECTION 2.0 RULES AND REGULATIONS REGARDING TENANT WORK

2.1 Public/Construction Safety

(a) It is the tenant's responsibility to ensure that the Tenant's Contractor fully observes and complies with all applicable laws and all applicable construction safety rules and regulations promulgated by authorities having jurisdiction there over from time to time, as well as with any rules and regulations imposed by the Landlord and/or BentallGreenOak from time to time. Should failure to observe and/or comply with any of the foregoing result in any delay to the completion of the Work or the Landlord's Work, as hereinafter defined, the tenant will be held responsible for such delay, in addition to being held responsible for any costs resulting from such delay or resulting from such failure to observe and/or comply with all such laws, rules and regulations in effect from time to time, all of which costs shall be reimbursed by the tenant to the Landlord.

(b) In the event that BentallGreenOak or any contractor designated by either of the Landlord or BentallGreenOak (the "**Landlord's Contractor**"), is occupying the premises for the purpose of completing work therein (the "**Landlord's Work**"), alongside the Tenant's Contractor(s) during the completion of the Work, in an effort to delineate the respective roles of such contractor(s), to the maximum extent permitted under the OHSA, the Landlord's Contractor will have the Landlord's Work designated as a separate project so that the tenant does not incur obligations as a constructor in connection with the performance of the Landlord's Work, and the Tenant's Contractor will have the Work designated as a separate project so that neither the Landlord, BentallGreenOak or the Landlord's Contractor, incur obligations as a constructor in connection with the performance of the Work.

(c) The tenant shall cause the Tenant's Contractor to keep the Operations Manager apprised as to progress of the Work and shall appropriately coordinate and schedule the interaction of the Work with the base building systems and the Landlord's Work, if any, including such coordination and scheduling as the Operations Manager or the Landlord's Contractor deems necessary so that the Landlord does not incur obligations as a constructor in connection with the performance of the Work (such as, by way of example only, the separation of work force by time and/or space).

(d) The tenant and the Operations Manager shall:

(i) ensure that all legal obligations imposed on constructors and other persons supervising, completing or coordinating the Landlord's Work and the Work, if any, are properly observed and performed;

(ii) ensure all directions given by any governmental or other regulatory inspectors are properly performed; and

(iii) ensure that necessary access is provided for any required inspections in connection with any of the foregoing.

(e) Health and safety issues shall be specifically addressed as follows:

(i) Areas under the control of the Landlord's Contractor: In those areas of the Building where the Landlord's Contractor is in control and performing the roles and responsibilities of the constructor (for example, loading docks and common areas), the tenant, the Tenant's Contractor, and all their representatives, shall be required to comply with all reasonable health and safety instructions and regulations established by the Landlord's Contractor.

(ii) Areas under the control of the Tenant's Contractor: In those areas of the Building where the Tenant's Contractor is in control and performing the roles and responsibilities of the constructor (i.e. within the premises), the Operations Manager and the Landlord's Contractor, as the case may be, agree to comply with all responsible health and safety instructions and regulations established by the Tenant's Contractor.

(f) Work Place & Public Safety

The Tenant's Contractor shall provide and maintain adequate first aid facilities during the completion of the Work.

At no time during the completion of the Work shall there be any disruption or interference with, nor shall any such Work at any times affect, any of the Building's life safety and fire protection and security systems unless otherwise co-ordinated, scheduled and approved, in writing, by the Operations Manager.

(g) Policing, Work Permits & Security Badges

The Tenant's Contractor will be responsible at all times for the safety and actions of its trades and delivery people. Any person found: (i) performing an unsafe act; (ii) blatantly disregarding the correct, proper and safe performance of the Work; (iii) disregarding the integrity of the existing Building and its systems; (iv) engaging in any disrespectful actions toward tenants or other persons on the Project, will be promptly removed from the Project and not permitted to return.

The Tenant's Contractor shall complete a weekly work permit at the Security Control Centre designated for the work site, and shall obtain security badges of sub-trades for the Work.

(h) Safe Work Permit

Upon request by the Operations Manager, prior to the commencement of the Work, the tenant shall require the Tenant's Contractor to:

(i) identify all hazards associated with the Work to the Operations Manager; and

(ii) provide written assurance to the Operations Manager that the Tenant's Contractor:

(A) has received, reviewed and thoroughly understands the safety policies, rules, regulations, laws and by-laws respecting the Work, the performance of the Work, and any such identified hazards, all as may be promulgated by the Landlord, BentallGreenOak or any other authorities having jurisdiction there over;

(B) is aware of the specific hazards associated with the Work and any and all precautions which should be taken in connection therewith;

(C) is capable of and is prepared to undertake any and all required precautions necessary to deal with such hazards, if any; and

(D) has the necessary safety training to perform such Work.

The tenant and the Tenant's Contractor shall have full responsibility for ensuring that all work performed by them in the Building complies with the OHSA.

2.2 Temporary Hoarding

Prior to commencing any Work which involves modifications to the front or exterior of an existing unit, the tenant shall, at its sole cost and expense, enclose the premises with a suitable temporary hoarding which shall be supplied, installed and painted in accordance with the Landlord's standard design criteria ("Hoarding"). Signage for the Hoarding will be supplied by the Landlord, at the tenant's expense. No additional signage shall be permitted on the Hoarding unless approved in writing by the Landlord.

In order for arrangements to be made for the construction and/or demolition of same, the tenant or the Tenant's Contractor must provide the Operations Manager with no less than forty-eight (48) hours written notice prior to proposed date of installation and/or demolition of the Hoarding.

Within twenty-four (24) hours following substantial completion of the Work, the tenant or the Tenant's Contractor shall, at the tenant's sole cost and expense, remove the Hoarding and shall restore the Building to the condition in which it existed prior to the installation and removal of the Hoarding, and shall repair any damage caused thereby, failing which Landlord shall perform such work on tenant's behalf and the tenant shall reimburse Landlord all costs incurred by Landlord in connection therewith.

For greater certainty, if the Work does not involve modifications to the front or exterior of an existing unit, Hoarding is not necessary. Any premises which remain completely non-operational during completion of the Work must have the interior of all windows and doors covered with adhesive window film as specified by the Landlord, unless otherwise approved in writing by the Landlord.

2.3 Temporary Services

The tenant is responsible for the distribution of temporary services within the premises during completion of the Work. Exposed electrical cords are not permitted outside the premises. Washrooms available for use by contractors will be designated by the Landlord. The tenant will be responsible, at its sole cost and expense, for the supply of all cleaning products required in connection with the Work and for the repair of all damages caused to the premises and the Building by the Tenant's Contractor.

2.4 Temporary Building Protection

The tenant and the Tenant's Contractor shall, at the tenant's expense, undertake all necessary precautions to: (a) reduce and/or control the levels of dust and debris created by the completion of the Work; and (b) prevent dust and debris from being circulated through the Building through the Building's HVAC and air handling systems, vertical mechanical and electrical service shafts and elevator shafts. For greater certainty, special consideration must be given to prevent dust from penetrating the elevator shafts during completion of the Work.

Dust shield enclosures and filter systems must be installed at all return air and transfer air openings during completion of the Work in compliance with the IAQ Management Plan outlined in Section 2.39, in order to prevent the transfer of dust.

The contractor should be responsible for the implementation and maintenance of dust control measures, including dust curtains and walk off mats at construction entrances and exits to separate construction and occupied areas, including elevator lobbies to control dust transfers caused by completion of the Work.

Smoke detectors and other dust sensitive equipment (i.e. thermostats) should be protected from dust, eliminating the possibility of a false fire alarm.

False alarm charges from the Toronto Fire Services will be charged back to the tenant.

If the Tenant's Contractor fails to perform the controls necessary to prevent and/or minimize dust transfer caused during the completion of the Work, the Landlord will undertake and maintain, at the expense of the tenant, such processes as the Landlord deems appropriate and necessary, having regard to the circumstances.

2.5 Hoisting

During times of heavy demand for hoisting materials and equipment, forty-eight (48) hours prior written notice will be required for use of the freight elevator. Unless a specific elevator has been prepared and designated for hoisting purposes, hoisting time will not be available during normal business hours for the Building, being such hours as are designated by the Landlord, from time to time, and which hours are, as at the date hereof, from 7:00 a.m. to 6:00 p.m., Monday through Friday ("**Business Hours**"); hoisting time will be provided outside of Business Hours, at the tenant's expense, unless otherwise expressly agreed to by the Landlord, in writing.

2.6 Work Areas

All construction materials, tools, equipment and work benches must be kept within the premises throughout completion of the Work. All public lobbies, washrooms and stairs shall be kept clear of construction materials and debris. If the public washrooms are used by the Tenant's Contractor, the Tenant's Contractor will be responsible, at its sole cost and expense, for cleaning same and for the repair of any of damages caused thereto, and may risk loss of working privileges in BentallGreenOak managed buildings if such cleaning and/or repair work is not completed as expeditiously as possible to the Landlord's satisfaction, acting reasonably. If the Tenant's Contractor fails to complete any such cleaning and/or repair work as and when required by written notice from Landlord, the Landlord may undertake such work and all costs incurred by the Landlord in connection therewith shall be reimbursed by the tenant.

2.7 Garbage Removal

The tenant and the Tenant's Contractor shall, at the tenant's expense, ensure that all garbage and debris resulting from the completion of the Work are stored in Waste Bins (as hereinafter defined) in the Waste Disposal Area (as hereinafter defined) only and are removed from the premises on a daily basis, failing which such storage and/or removal shall be completed by the Landlord at the tenant's expense. In addition, Waste Bins which remain in the Building after completion of the Work will be removed by the Landlord at the tenant's expense. Waste Bins are not allowed to remain in the receiving/loading area unless specifically authorized by the Landlord, in writing.

After completion of the Work and removal of the Waste Bins, the Tenant's Contractor shall restore the Waste Disposal Area to a clean, broom-swept condition with no materials left therein, thereon or thereabout, failing which Landlord shall undertake such janitorial work at the tenant's expense.
The loading/receiving facility is not to be used as a workshop area, i.e. this area is not to be used for any welding, sawing, pipefitting, or any other kind of construction, and is to be used solely for the purpose of shipping and receiving of materials.

Under no circumstances should the Building compactor be used for disposal of construction materials.

Any costs incurred by the Landlord as a result of the Tenant's Contractor failing to abide by the provisions of this Section 2.7 shall be reimbursed by the tenant.

2.8 Working Hours

All work must be done outside of normal business hours. No work is permitted during weekdays between the hours of 7:00 am to 6:00 pm.
The tenant's proposed schedule for completion of the Work ("**Work Schedule**") is subject to the prior written approval of the Landlord prior to the commencement thereof. Any Work which is required to be carried out at times other than those agreed to in the Work Schedule will require the prior written approval of the Landlord. Any Work which affects the life safety, sprinkler and/or standpipe systems of the Building must take place outside of Business Hours and under supervision by the Landlord or the Landlord's Contractor.

All work shall be carried out in the Leased Premises after **business hours from 6:00pm to 7:00 am, Monday to Friday or on Saturday or Sunday.**

Any work creating excessive noise (such as drilling & hammering), or which might be an inconvenience to other Tenants, will have to be discussed with the Operations Manager and must be done outside normal office hours.

2.9 Temporary Fire Protection

At all times during the completion of the Tenant's Work, the tenant and Tenant's Contractor shall provide operable fire extinguishers, in readily accessible, prominent locations within the premises.

2.10 Security

All property of the tenant and the Tenant's Contractor shall be so kept on the premises or elsewhere about the Building at the sole risk of the tenant and the Tenant's Contractor. The tenant shall, at its sole cost and expense, ensure that the premises and the contents thereof are secured at all times during the completion of the Work.

Landlord, BentallGreenOak and Landlord's Contractor and their servants, agents, customers, contractors and other persons for whom they are in law responsible shall not be liable or responsible in any way for any injury or death to any person or for any loss or damage to any property, at any time on or about the premises or owned by or being the responsibility of tenant, or Tenant's Contractor or any of their servants, agents, customers, contractors or persons for whom they are in law responsible elsewhere on or about the Building, no matter how the same shall be caused.

2.11 Access and Deliveries

Access to and from the premises by personnel engaged in completing the Work, all deliveries to and from the premises, and loading and unloading of goods, merchandise, refuse, materials and any other items, shall be made only by way of such driveways, access routes, doorways, elevators, corridors and loading docks as Landlord may from time to time designate and shall be subject to all applicable rules and regulations made by Landlord from time to time.

Tenant shall obtain the prior written approval of the Landlord for the delivery and/or installation of any items which, as a result of their weight or dimension, require special handling.

All construction personnel will be required to sign in and out nightly at the security desk, unless otherwise agreed to in writing by the Landlord.

Delivery and contractors' trucks will be permitted access to receiving areas of the Building only for the purpose of unloading and loading of materials for a maximum duration of thirty (30) minutes. Absolutely no parking will be permitted in the designated loading/receiving areas or fire routes. Lack of cooperation in this regard will result in vehicles being towed at the Tenant's risk and expense.

All carts being used by the Tenant's Contractor for job-site deliveries must have rubber wheels. Landlord's equipment (such as ladders, trucks, bins, dollies, etc.) may not be used by contractors.

2.12 Damage

The Tenant's Contractor shall, at its expense, protect all base building systems, materials and finishes during the completion of the Work. Any base building systems, materials and/or finishes which are damaged as a result of not having been properly protected in accordance herewith shall be repaired by the Landlord and all costs incurred by the Landlord shall be reimbursed by the Tenant.

2.13 Noise

Any work which may result in excessive noise emanating from the premises (such as, by way of example only, coring or drilling) may not be carried out during Business Hours.

2.14 Landlord's Access to Premises

The Landlord shall have access to the premises at all times for the purpose of completing, correcting or inspecting the Work.

2.15 Work Conflict

All Work performed by the Tenant's Contractor shall be performed in a manner that will not interfere or conflict with any activities of the Landlord, BentallGreenOak or the Landlord's Contractor.

2.16 Material Handling

(a) See Section 2.5 for procedures pertaining to hoisting services.

(b) The tenant and the Tenant's Contractor shall, at their expense, be responsible for protecting elevators (including floors, walls and ceilings therein) from damage during the transportation of materials being used in connection with the completion of the Work, using pads and other cladding material provided by the Landlord, and any other protection methods that may be required (which other protection shall be subject to Landlord's prior written approval). Upon completion of elevator use, the tenant and the Tenant's Contractor shall, at their expense, ensure all protective coverings are removed from the elevators and returned to the Landlord (where appropriate), and that the elevators are left in clean, broom swept condition, and shall repair any damage caused thereby, failing which such materials shall be removed by the Landlord and the Landlord shall clean the elevators and repair any damage thereto, all at Tenant's sole cost and expense.

2.17 Access Panels

The tenant must provide access panels of sufficient size in wall or ceiling construction, as directed by its engineering consultants or the Landlord, in order to permit necessary access to equipment and/or electrical/mechanical services from time to time.

2.18 Roof Work/Access

Under no circumstances will the tenant and/or the Tenant's Contractor enter onto the roof without first:

(a) obtaining the Landlord's prior written approval thereto;

(b) completing and delivering to the Landlord a copy of the Landlord's then standard roof-top access waiver form, a copy of which can be obtained from the Operations Manager; and

(c) completing fall arrest training.

All roof openings will be carried out by the Landlord's designated roofing contractor at the expense of the tenant. The tenant is to provide all sleepers and/or curbs, as required, for installation by the Landlord's designated contractor, at the tenant's expense.

2.19 Testing and Tie-Ins

The tenant must obtain the Landlord's written approval prior to undertaking any tie-ins to base mechanical, electrical, fire protection and life safety systems.

2.20 Powder-Actuated Devices

Powder-actuated tools, such as "Ramset" and "Hilti" are not permitted for use in securing fasteners which support ceiling suspension systems or equipment suspended from the underside of concrete slabs or steel deck structures.

2.21 Drilling or Cutting

The Tenant's Contractor is not permitted to drill or cut openings of any description in any part of the base building structure (including floors, walls and ceilings) without the prior written approval of the Landlord and the Landlord's designated structural engineer. Prior to commencing any such work which may impact structural reinforcing bars, the tenant, at its sole cost and expense, shall be required to engage Landlord's designated x-ray inspection contractor to perform an x-ray inspection of the Premises. Any such approved work must be completed by the Tenant's Contractor, at the Tenant's expense, outside of Business Hours. Any damage to cast-in electrical wiring will be repaired by the Landlord's Contractor at the tenant's expense. **Absolutely no scanning allowed only x-ray.**

2.22 Welding

No open flames for welding, cutting or other purposes are permitted without the prior written approval of the Landlord. The Tenant's Contractor shall ensure that use of pressurized gas cylinders is in accordance with requisite safety provisions and requirements. All open flame work must be performed outside Business Hours and **must be approved by the Landlord in writing with minimum 72 hours' notice**. Any contractor requiring welding services must abide by the Landlord's Hot Work Policy.

A "Hot Work" permit must be submitted and approved by the Landlord prior to performing this work. (See Appendix C for Hot Work Permit). An operational fire extinguisher must be available in the immediate vicinity of the work, in addition to those already present. **The Tenant contractor shall co-ordinate the deactivation of the smoke detectors and fire watch services with the Landlord. All costs associated with this work will be billed back to the tenant plus an applicable 15% administration fee. The contractor must notify the Landlord when the work is completed in order for the life safety systems to be reinstated. Should the Tenant contractor neglect to notify the Landlord regarding the above-noted work and a fire alarm is activated resulting in a false alarm, the Tenant contractor will be charged with all associated costs plus an applicable administration fee (15%) per occurrence. No gas powered equipment is to be used within the building.**

2.23 Fasteners

Mechanical fastening is not permitted to curtain walls, window frames, or walls which may contain vapor barriers or special fire rated structures. Clips, in lieu of screws, must be used to fasten interior walls and partitions to the ceiling grid.

2.24 Electrical Power Shutdown

All requests for electrical power shutdowns are subject to the Landlord's prior written approval and must be made in writing no less than four (4) weeks prior to the required shutdown.

2.25 Air System Shutdown

All requests for air system shutdowns are subject to the Landlord's prior written approval and must be made in writing at least forty-eight (48) hours prior to the required shutdown. It shall be reasonable for the Landlord to withhold its approval to any request for an air system shutdown if same would interfere or conflict with a request received by the Landlord for the provision of air conditioning services from another tenant in the Building.

2.26 Water System Shutdown

All requests for water system shutdowns are subject to the Landlord's prior written approval and must be made in writing, in advance, in accordance with the following schedule:

SYSTEM COMPONENT	**REQUIRED NOTICE PERIOD**
Heating	One (1) week
Condenser	One (1) week
Standpipe/Sprinkler	Four (4) days
Domestic (isolated floor)	Two (2) days
Domestic (building supply)	Two (2) weeks

2.27 Carpet Laying

Carpets may not be glued to the floor, except where a low VOC "quick-release" type of glue and the Landlord's written approval has first been obtained. The Landlord reserves the right to approve other methods of application.

2.28 Plumbing

Where plumbing is removed from the premises, all water supply, drain lines and vent connections must be removed from within the ceiling space, back to the core riser, and properly capped, all to the satisfaction of the Landlord, and the Landlord's consultants, evidence of which satisfaction shall be provided to tenant, in writing, upon completion of such work.

2.29 Ductwork

When the ductwork distribution system is altered in the premises, the ductwork that is not used must be removed from within the ceiling space, capped and sealed, all to the satisfaction of the Landlord, and the Landlord's consultants, evidence of which satisfaction shall be provided to tenant, in writing, upon completion of such work.

2.30 Air Balancing

Upon completion of the Work the tenant must provide the Landlord with an air balance report completed by the Landlord's designated balancing company, at the tenant's expense, which report is subject to review by the Landlord's consultant prior to final submission to the Landlord. Please contact the management office for the Landlord's designated balancing contractor.

2.31 Firestopping

The Tenant's Contractor must ensure that all fireproofing is reinstated where access is required between Building fire separations. The replacement material and method for reinstallation must meet applicable building code requirements. A CSA-ULC approved material (i.e., "Firestop") must be used to seal all core and floor penetrations. All pipes passing through a floor penetration must be sleeved, caulked and waterproofed. If the Tenant's Contractor fails to undertake the appropriate provisions, the Landlord will complete the work at the tenant's expense.

For further information on firestopping – please refer to Appendix E "Firestop Installation and Specification Guidelines."

2.32 Fireproofing Material

All fireproofing material that is removed from steel decks and beams must be replaced with a suitable fireproofing material approved for use, and installed, in accordance with applicable laws and building and fire code requirements. In no event shall the level of fire protection which exists in the Building prior to the undertaking of any such work, be reduced. The Landlord reserves the right to request from the tenant an independent inspection of the fireproofing by a qualified consultant at the tenant's expense.

2.33 Daily Clean Up

The tenant, at its sole cost and expense, must ensure that corridors are left free of debris and dirt and marks are removed from corridor walls, floors, doors etc., on a daily basis. If this work is not completed by tenant or the Tenant's Contractor, the Landlord will complete same at the Tenant's expense.

Drywall, concrete and paint shall not be disposed of through any drains in the Building including, without limitation, the janitor's sink and drains found in washrooms in the common areas of the Building. The Tenant's Contractor must make arrangements for the appropriate disposal of such materials off-site. If the Landlord determines that any drainage system in the Building has become clogged or restricted as a result of the disposal of inappropriate materials through such system by the tenant or the Tenant's Contractor, the Landlord shall remedy such clog or restriction and the tenant shall reimburse the Landlord all costs incurred by the Landlord in connection with same.

2.34 Stairwell Doors

All stairwell doors are to be kept closed at all times during completion of the Work for fire and safety reasons. Any construction site found to have stairwell doors propped open will be assigned a security guard, at the tenant's expense, until the situation is resolved to the satisfaction of the Operations Manager.

Exterior doors to the Building are alarmed and monitored by a service provider. These doors must be kept closed and locked outside of Business Hours. The tenant will be responsible for any charges for alarm response caused by the Tenant's Contractor.

2.35 Waste Management

(a) An important element of the commitment to waste management is ensuring effective documentation is kept during the completion of the Work. This is done through a Waste Diversion Report ("WDR"). The WDR is comprised of a compilation of waybills, invoices, letters and other documentation from the Tenant's Contractor that are appropriately indexed and reflect product types, quantities and details of waste diverted and waste sent to landfill. A copy of the WDR should be provided to the Operations Manager when completed.

(b) Prior to commencing the Work, the tenant must inform the Tenant's Contractor of the following processes and procedures:

(i) prior to commencing the Work, a central waste collection area, dedicated to the separation and storage of all waste generated during the completion of the Work, should be designated onsite ("**Waste Collection Area**");

(ii) separate containers must be provided in the Waste Collection Area, in appropriate sizes, to accommodate the type and quantity of waste estimated to be generated ("**Waste Bins**");

(iii) all Waste Bins must be clearly labeled to identify the type of waste permitted to be disposed therein;

(iv) if the Waste Collection Area is not large enough to allow for proper sorting, waste materials should be shipped to an off-site sorting station;

(v) daily inspections should be conducted to ensure each Waste Bin receives the appropriate waste and there is no cross-contamination;

(vi) all Waste Bins should be promptly emptied when full;

(vii) "blue box" recycling bins must be provided on-site for recycling the following waste products generated by site workers and visitors: aluminum; food or beverage cans, glass and plastic bottles and jars; and cardboard and paper products.

(c) Within ten (10) business days following Landlord's approval of the Work, the Tenant's Contractor shall deliver to the Landlord a letter identifying:

(i) those leasehold improvements and other fixtures within the premises which the Tenant's Contractor intends to reuse;

(ii) those leasehold improvements and other fixtures within the premises which the Tenant's Contractor intends to remove from the Building and, with respect to such items, such letter shall further identify:

(A) the salvaging/recycling facilities proposed to be used;

(B) the material(s) that will be accepted by each facility and whether the material(s) will be reused, recycled or sent to landfill.

2.36 Pre-occupancy Cleaning

Prior to commencing business on all or any part of the premises, the tenant shall, at its sole cost and expense, engage the Landlord's designated janitorial contractor to clean the following:

- light fixtures and lenses
- ceiling grid and ceiling tiles
- floor tiles and carpets
- corridor walls and doors immediately adjacent to the premises
- perimeter radiation and/or induction units and/or fan coils (inside and out)
- interior and perimeter supply air diffusers
- return and exhaust air grilles
- lint screens and coil (cleaning shall be carried out by the Landlord's base building cleaners and charged to the tenant's account)
- inside faces of all exterior glazing including window frames and mullions, and inside faces of all interior partition glazing
- electrical trench header ducts, including those adjacent to the premises (if applicable)
- all service/utility rooms
- venetian blinds/sun shades (cleaning of the blinds shall be carried out by the base building contractor).

If the tenant fails to have the required cleaning undertaken as and when required hereby, the Landlord will provide this service at the tenant's expense.

2.37 Construction Deposits/Violations

(a) **Construction Deposits**

The Contractor will provide a construction deposit and sign an "Acknowledgement Letter" per the BentallGreenOak policy guidelines, and this deposit will be applied to any fines or work related to tenant premise or property construction (i.e. system drain downs, tile etc.). The deposit will be provided prior to construction in the form of a certified cheque, made out to the legal owner, to be held in a non-interest bearing account until such time as the required closeout documents are received to the satisfaction of the Landlord. Contact person should generally be the General Contractor (hired directly by the tenant). The contact must also be an authorized representative of the contract company.

If a fine is to be applied, an invoice will be issued. It will describe the fine and amount applied per the policy guidelines. This can be issued during or following the post construction inspection.

The deposit will be based on 3% of the project cost with a minimum of $3,500 and a maximum of $10,000

Upon a post inspection, by the Landlord, all, some or none of the deposit will be returned within 45 days, depending on the timing of the repair to make good by the Contractor or Landlord.

(b) **Violations**

1.	Causing a fire.	$10,000
2.	Failure to comply with the BentallGreenOak Fire Watch/Hot Work Policy.	Up to $5,000
3.	Open fire work without a hot work permit and 10 lb. extinguisher.	$2,500
4.	Deliberate disconnection of the fire system without authorization.	$3,000
5.	Activation of Fire Alarms.	$1,500
6.	Leaving the building, while fire alarm system is isolated.	$3,000
7.	Obstruction of any fire equipment (pull stations, hose stations, sprinkler heads, and smoke heads).	$1,000
8.	Improperly stored compressed gas cylinders while not in use.	$1,000
9.	Failure to post all Building Permits, WSIB, WHMIS, H&S policy in visible locations.	$500
10.	Failure to wear appropriate/required PPE as required by OHSA.	$500
11.	Failure to comply with any BentallGreenOak Construction Rules or Regulations is open to fines up to $1,000 at the discretion of BentallGreenOak.	
12.	Storage of combustibles in service areas.	$500
13.	Unsafe build-up of garbage.	$500
14.	Wedging open or obstructing any stairwell/fire door or obstructing any means of egress.	$500 per door
15.	Smoking within the property.	$500
16.	Storage equipment and tools in service areas and rooms without written permission.	$500
17.	Improper implementation of dust control measures at entrance and exit area.	$500
18.	Failure to return badges, keys, or pass cards to the Access Control Centre.	$250
19.	Unauthorized use of passenger elevators by contractors.	$250
20.	Welding, sawing and /or cutting in shipping and receiving area.	$250
21.	Any damage to property, caused by contractor, repaired by owner.	
22.	Unauthorized work during business hours.	$2500
		Actual Repair + 15%

The above-mentioned is a general list of fines and violations. BentallGreenOak is not restricted to just these fines. Any actions that are in contravention of the National Fire Code, Provincial Fire and Building Codes, Life Safety Code, Provincial Health and Safety or any other applicable legislation or regulations as determined by BentallGreenOak may result in fine of $10,000 to $100,000. All fines will be at the discretion of BentallGreenOak.

2.38 Indoor Air Quality ("IAQ") Management Plan for Facilities Additions and Alterations ("IAQ Management Plan")

(a) **Guidance for Resources and Implementation**

The objectives of the IAQ Management Plan will be achieved through the "control measures" detailed in the following tables ("**Measures**"). These Measures are applicable to all Work completed within the Building. The Tenant's Contractor is responsible for providing to the Landlord documentation of all actions planned to be, and actually, taken on-site to ensure IAQ is maintained for the duration of the completion of the Work. Each Measure references an applicable strategy from the Sheet Metal and Air Conditioning Contractors National Association (SMACNA) IAQ guidelines for Occupied Buildings Under Construction, second edition November 2007.

(b) **HVAC Protection**

Suspend or modify HVAC operation during completion of the Work to prevent or reduce the circulation of particulate matter and pollutants.

The following should be taken into consideration:

(i) all HVAC equipment will be protected from dust, odors or other contaminants and exposure to the elements. The system must be evaluated in detail by an engineer experienced in HVAC maintenance and operations;

(ii) the entire HVAC system will be shut down during heavy construction or demolition;

(iii) all return openings in the construction area will be sealed with plastic;

(iv) if permanently installed air handlers are used during construction, filtration media with a MERV 13 shall be used at each return air grille, as determined by ASHRAE 52.2-1999. All filtration media will receive frequent maintenance and be replaced immediately prior to occupancy;

(v) when the HVAC system must remain operational, the heaviest work areas will be dampered-off or otherwise blocked;

(vi) the mechanical room will not be used to store construction or waste materials;

(v) consider protection of air plenums in the planning phase of the Work including:

(A) ducts in the construction zone should be disconnected from the remainder of the active system;

(B) seal openings in new ducts until construction is finished; and

(C) replace missing ceiling tiles, especially where the ceiling plenum is the return air path;

(vi) ducts, diffusers, and window units will be inspected upon completion of the work and cleaned if needed. The condition of the main filters will be checked whenever visible particulates are discharged from the system;

(vii) where major dust loading is expected to impact operating HVAC systems, consideration will be given to upgrading filter efficiency. Filters will be installed with 60-80-% dust spot efficiency. For odors, activated charcoal or potassium permanganate will be used; and

(viii) an HVAC system will be deemed to have excessive dust or debris when an accumulation of particles can be observed under (not on) diffusers, or when ventilation is restricted. A decision whether, and how, to clean the ducts will be based on a detailed visual inspection of the system. Both highly specialized equipment and professional expertise is required to ensure that dust is effectively removed and contained.

(c) **Source Control**

(i) Minimize indoor pollutants by:

(A) selecting low-emitting products;

(B) using appropriate equipment (e.g., power tools that do not burn fossil fuels); and

(C) changing work practices (e.g., change techniques to reduce emissions, use vacuum dust collection systems, etc).

(ii) Substitute high VOC content products with lower VOC alternatives.

(iii) Operating procedures which are detrimental to IAQ will be addressed including:

(A) restricted motor vehicle access from areas where emissions may be drawn into the Building;

(B) substitution of diesel equipment to cleaner gas or electric equipment;

(C) switching gas powered equipment to electric;

(D) adding catalytic converters to engines; and

(E) turning equipment off when not needed.

(iv) Work practices will be modified so that airborne dust is minimized.

(v) Pollution sources will be directly exhausted to the outside by in-building systems or by portable systems.

(vi) Where exhaust is not feasible, local air will be re-circulated through a portable cleaner.

(vii) Open containers will be avoided thereby reducing VOC emissions.

(d) **Pathway Interruption**

(i) Isolate areas of work to prevent contamination of clean or occupied areas.

(ii) Work areas will be depressurized. A negative pressure will be created by either adjusting the balance of the HVAC system or by installing portable exhaust units.

(iii) Occupied spaces will be pressurized if the HVAC system is operating during construction and on occupied floors. Increasing supply air and/or reducing return/exhaust air in Building areas that remain occupied during construction will help exclude airborne dust and odors.

(iv) Barriers will be erected to contain construction areas. The extent of barriers required is based on the materials involved and the implications of dust, odors or other contaminants of concern escaping the site.

(v) Relocate pollutant sources. Project equipment and staging areas will be segregated from critical air flow pathways.

(vi) Temporarily seal the Building if construction emissions occur on the roof or adjacent to the Building allowing contaminants to be drawn in through the outside air intake. If no other method of control is available, intake dampers, windows, doors or other pathways will be temporarily sealed for short durations.

(e) **Housekeeping**

Intensify clean up procedures to remove pollutants from the site. Site cleaning to maintain IAQ during construction will include:

(i) suppressing dust with wetting agents or sweeping compounds;

(ii) increasing the frequency of dust cleaning;

(iii) use of HEPA vacuums, instead of sweeping, for more efficient dust collection;

(iv) ensuring all surfaces are kept clean;

(v) immediate removal of spills and excess applications of solvent-containing products;

(vi) prompt removal of construction and demolition waste, debris and rubbish throughout the duration, and upon completion, of the Work;

(vii) prohibiting all tobacco and cigar smoking in the Building interior and allowing same only in those areas of the lands which are expressly designated for such use, if any;

(viii) preventing fiber discharge or particle release when installing loose insulation media;

(ix) regular and consistent cleaning of the HVAC system throughout the duration, and upon completion, of the Work;

(x) protecting porous materials both stored and installed on site (e.g. insulation and ceiling panels) from moisture; and

(xi) immediately removing from the Building any accumulations of water.

(f) **Scheduling**

Reschedule work hours to prevent worker exposure to pollutants. Supplementary scheduling strategies may include delaying occupancy and providing construction buffer zones. Install absorptive materials after the prescribed dry or cure time of wet finishes to minimize adverse impacts on IAQ.

(g) **Air Cleaning**

(i) Make suitable preparations for occupancy (i.e. plan for a "flush-out period" and/or schedule IAQ testing).

(ii) Remove contaminants that may be remaining in the premises or the Building, or any systems or facilities therein, upon completion of the Work.

(iii) Upon completion of the Work replace filtration media and conduct a baseline IAQ test procedure for the affected space in the Building that demonstrates that the concentration levels for the chemical air contaminants are below specified levels. For each sampling point where the maximum concentration limits are exceeded, conduct a partial Building flush-out for a minimum of two (2) weeks, then retest the specific parameters(s) that were exceeded to indicate the requirements have been met.

Chemical Contaminate	**Maximum Concentration**
Formaldehyde	27 parts per billion
Particulates (PM10)	50 micrograms per cubic meter
Total Volatile Organic Compounds	500 micrograms per cubic meter
4-Phenylcycolohexene (4-PGH)	3 micrograms per cubic meter
Carbon Monoxide (CO)	9 parts per million & no greater than 2 parts per million above outdoor levels

The air sample testing shall be conducted as follows:

(A) testing shall be completed over the course of a normal operating day, and shall be performed by parties experienced with IAQ testing;

(B) air samples collected for every 1,000 square meters, or for each contiguous floor area, whichever is greater, but the total number of samples must be at least 6 (5 outdoors and 1 indoors) and not less than one location per floor;

(C) testing to be completed between 1200mm and 2100mm from floor level;

(D) measurements conducted with the Building ventilation system starting at normal daily start time and operated at the minimum outside air flow rate for the occupied mode throughout duration of the air testing;

(E) Building shall be fully finished and unoccupied; furniture can be included in the testing if desired, but is not required;

(F) when re-testing non-complying Building areas, take samples from the same locations as in first test;

(G) copies of the IAQ testing results should describe: the containment sampling and analytical methods; the locations and duration of contaminant samples; the field logging sample log sheets and laboratory analytical data; and the methods and results utilized to determine that the ventilation system was started at the normal daily start time and operated at the minimum outside air flow rate for the occupied mode through the duration of the air testing.

(iv) After flush out or testing is complete:

(A) replace all filtration media immediately prior to occupancy;

(B) return HVAC system to designed or modified sequence of operations.

(v) Wherever possible, construction taking place in tenant space or within or affecting the base building systems shall use materials which adhere to the VOC and chemical compound limits as stated in the following tables:

Architectural Adhesives

Application	VOC Limit (g/L)	Application	VOC Limit (g/L)
Indoor carpet adhesives	50	Carpet pad adhesives	50
Outdoor carpet adhesives	150	Wood flooring adhesives	100
Rubber floor adhesives	60	Subfloor adhesives	50
Ceramic tile adhesives	65	VCT and asphalt tile	50
Drywall and panel adhesives	50	Cover base adhesives	50
Multipurpose construction	70	Structural glazing	100

Specialty Applications

Application	VOC Limit (g/L)	Application	VOC Limit (g/L)
PVC Welding	285	CPVC welding	270
ABS Welding	400	Plastic cement welding	250
Adhesive primer for plastic	250	Contract adhesive	80
Special purpose contact adhesive	250	Structural wood member adhesive	140
Sheet applied rubber lining	850	Top and trim adhesive	250

Substrate - Specific Applications

Application	VOC Limit (g/L)	Application	VOC Limit (g/L)
Metal to Metal	30	Plastic foams	50
Porous material (except wood)	50	Wood	30

Fiberglass	80

Sealant and Sealant Primer VOC Limits

Sealant	VOC Limit (g/L)	Sealant Primer	VOC Limit (g/L)
Architectural	250	Architectural - non porous	250
Other	420	Architectural - porous	775
		Other	750

Interior Paint VOC Limits

Paint	VOC Limit (g/L)
Interior non-flat	150
Interior flat	50

Emissions Limits for Carpet/Carpet Cushion

CRI Green Plus Limits for Compound in Carpet	Limit (mg/m2)hr	CRI Green Label Limits for Compounds in Carpet Cushions	Limit (mg/m2)hr
Total VOC	0.50	Total VOC	1.00
4-PC	0.05	BHT	0.3
Formaldehyde	0.05	Formaldehyde	0.05
Styrene	0.40	4-PC	0.05

SECTION 3.0 BASE BUILDING DESIGN INFORMATION

3.1 General

The following information, procedures and regulations may be amended or added to from time to time by the Landlord, and the tenant must abide by such changes and additions upon notification. All Work must conform to the base building specification.

3.2 Office Floor Exits

Where full floor tenancies are involved, the tenant's space planner or interior designer must adhere to Section 3.4.2.3 1 (a) and (b) of the Ontario Building Code. Layout options should be discussed with the Landlord.

3.3 Cross-Over Floors

As required by Section 3.4.6.16 of the Ontario Building Code. The Cross-over floors are: 3, 7, 11, 13, 17, 20, 25, 28M

3.4 Floor Load Capacity

A general definition of the structure is provided to tenants by means of copies of selected structural drawings. Additional drawings or information, which the tenant may reasonably require, may be obtained from the Operations Manager. Office floors have been designed for a live load of 80 pounds per square foot plus 20 pounds per square foot for partitions.

Unusually heavy loading concentrations, such as central filing areas, vaults, or safes, etc., must be specifically indicated on the tenant's working drawings and are subject to the Landlord's prior written approval.

The tenant must not overload the structure. Drywall may not be stacked higher than twenty-four inches (24") or 610 mm.

3.5 Office Finishes

(a) Floors

Finished concrete floor slabs are provided as the base building standard however, floor coverings will be provided in multi-tenant floor corridors and elevator lobbies. If not reusing existing floor finishes within a tenant premises, environmentally friendly options must be specified. For example:

(i) modular carpets, reconditioned options or those with high recycled content;

(ii) low emissions products;

(iii) linoleum instead of vinyl;

(iv) carpets from vendors who will take back the product for recycling at the end of its useful life.

All carpets and carpet cushion shall meet the requirements of the *CRI Green Label Carpet Testing Program* or Canadian equivalent. Products that meet or exceed the *Carpet and Rug Institute's Green Label Plus* testing requirements aid in improved indoor air quality. Modularity is also a desired trait as tiled products have less waste than broadloom versions.

(b) Interior Walls

(i) Core walls, columns and tenant demising partitions will be prime coated as a base building standard. On multi-tenant floors the corridor wall finishes are paint and the elevator lobby walls are covered to building standard.

(ii) The tenant should minimize the amount of VOC in paints, adhesives and sealants that are specified. The tenant should avoid the use of vinyl wall coverings as much as possible as most tend to have a high VOC content.

(iii) All paints and coatings shall achieve *Green Seal GS-11 (Interior Paints)* or Canadian equivalent requirement, *Green Seal GC-03 (Anti-Corrosive and Anti-Rust Paints)* or Canadian equivalent requirement, and *SMAQMD Rule #1113 (all other Architectural Coatings, Primers, and Undercoats)* or Canadian equivalent requirement.

(c) Ceilings

On existing floors, finished ceilings are suspended T-bar ceiling with lay-in acoustic tiles (Armstrong 791-C MR); grid size 750 mm x 750 mm. For new build-out floors, the ceiling tile is USG Mars ClimaPlus DXW. Installation of drywall ceilings will be considered as a regular part of the drawing review process. Drywall ceilings will be considered non-standard leasehold improvements and, upon the expiry or earlier termination of the lease for the premises, the tenant shall, at its sole cost and expense, be required to remove same and reinstall the base building standard t-bar ceiling, and shall repair any damage caused thereby.

(d) Perimeter Walls

The curtain wall consists of aluminum mullions, covered on the exterior with stainless steel, glass spandrel panels and double glazed, sealed vision panels with silver reflective outer glass.

(e) Elevator Lobbies and Corridors

In the event of multi-tenant floors in the Building, the Landlord will provide the following:

(i) public corridors will have base building standard wall coverings;

(ii) public corridor partitioning together with corridor finishing, ceiling and lighting;

(iii) demising partitions between premises running from the core, or corridor, to the exterior wall to Building standard construction;

(iv) base building standard elevator lobby finishes including walls, ceiling, lighting, sprinklers and air conditioning;

(v) floor and base will be carpeted in all public corridors, including carpet inserts within the elevator lobby;

(vi) premises entrance identification in accordance with the terms of the lease, based on the building standard signage.

(f) Doors and Frames

(i) Entrances to electrical, mechanical and service rooms, washrooms, stairwells, etc., are hollow metal doors within pressed steel frames painted in accordance with base building standard. All base building standard entrance doors (including doors, frames and hardware) on multi-tenant floors will be provided by the Landlord.

(ii) Premises entrances on multi-floors will be full-height, glass, positive latching hardware polished chrome frames. Exit doors and frames will be exposed wood grain finish. Hardware consists of a Medeco M3 Series 8200 Mortis lockset with KDD trim, 32D stainless steel finish, door closer and two pairs of ball bearing butt hinges.

(iii) Entrances designed by the tenant are subject to the Landlord's prior written approval. Entrances approved by the Landlord will be installed by the tenant at the tenant's expense. No credit will be given for base building entrance doors not being utilized as part of the Work. Where the Ontario Building Code requires premises to have a second exit, same shall be installed using base building standard door with matching frame, to be supplied and installed at the tenant's expense.

3.6 Hardware

All door locks installed by the tenant, on both entrance and interior doors, must be keyed to the Building master keying system which, while allowing complete freedom for the tenant regarding the locking arrangements for its premises, provides the Landlord access to each office at all times for both normal cleaning and emergency situations.

The Landlord's designated hardware contractor maintains the master keying system and records of key coding and distribution, no other locksmith or lock manufacturer will be permitted to change the keying of any locks, unless otherwise approved by the Landlord in writing. The Landlord reserves the right, from time-to-time, to change its designated hardware contractor and/or locksmith.

The Landlord and the Landlord's designated hardware contractor must be notified prior to any installation of a card access system for any suite entrance door.

3.7 Signage

Tenant identification signs located within the premises, but which are visible from outside the premises, or which are otherwise located outside of the premises, must be in compliance with the Building’s sign criteria and are subject to the Landlord’s prior written consent as to number, style, colour, location, size and affixation of same. Base building suite identification signage will be provided by the Landlord, at the tenant’s expense. Details of the sign design criteria for the Building are available from the Landlord upon request.

Requests, in writing, are to be submitted approximately two (2) months prior to the anticipated move-in date in order to facilitate the delivery and installation of the signage.

3.8 Mechanical Systems/HVAC

HVAC is provided by means of a compartment variable air volume system. A ceiling ducted distribution system supplies outdoor and conditioned air to all zones. Air circulation is maintained as each zone at 0.8 cfm/sq.ft. minimum by VAV boxes at each perimeter and interior zone. Outdoor air introduction of 0.1 cfm per square foot minimum is regulated under control of a floor carbon dioxide sensor.

CO_2 concentration is controlled to 900 ppm above outside ambient levels as per ASHRAE standards or less.

Perimeter and interior temperature control zones are approximately 450 sq.ft. and 1,000 sq.ft., respectively. Zone temperature control will be provided by temperature thermostats connected to VAV Box controller linked to a central monitoring and control facility. Heating for perimeter spaces will be provided by means of hot water heating coils. Air supply will be through light troffers in the interior and slot diffusers along the perimeter. Diffusers will be left on the floor for installation by the tenant at its sole cost and expense. Return air for both interior and perimeter slots will be through slotted light fixtures. Distribution ducts downstream of fan powered VAV terminals on interior zones will be provided by the tenant at its sole cost and expense.

Chilled water valved and capped connections for future supplementary cooling units required for LAN or similar type computer rooms will be available. A total capacity of 2 watts/sf is available (approx. 15 tons/floor). The Landlord reserves the right to meter this utility at the tenant's sole cost and expense. Capped duct connections for washroom and general exhaust are available. Open-ended general exhaust ducts may be used for non-grease-laden exhaust requirements. Utilization of these connections and core space accommodations are subject to the prior written approval of the Landlord, which may be withheld in the Landlord's sole discretion.

The tenant must design to quantifiable standards for IAQ performance. The tenant must:

(a) provide for separate control zones in every room or area with a solar exposure;

(b) zone interior spaces separately; and

(c) install controls and systems capable of sensing space use and modulating HVAC systems in response to space demand; this includes private offices and specialty occupancies (conference rooms, kitchens, etc.)

3.9 Fire Protection

Each area is provided with sprinklers, fire hose cabinets and portable fire extinguishers. The placement of tenant partitions can affect the sprinkler and fire hose coverage. **The cost of any modifications to such systems, including system impairment requirements such as performing fire watch, shall be at the expense of the tenant.** All sprinkler changes/modifications must be completed by the Landlord's designated sprinkler contractor.

Any cost associated with the drain down and refilling of the base building sprinkler and fire standpipe system will be at the expense of the tenant.

Please refer to List of Base Building Contractors/Trades for the Landlord's designated sprinkler contractor.

Tenant's Contractor to provide additional portable fire extinguishers in premises while system is drained.

3.10 Meters - Water

Check meters are required on all domestic water services serving the premises. The tenant, at its expense, shall install all such meters. Please note that single-pass water cooling systems (supplementary A/C) are not permitted in the Building. A charge for water usage will be established based on consumption used for each applicable system.

3.11 Plumbing and Drainage

Plumbing connections into the main domestic cold water supply, sanitary drain and vent risers are provided at the main core to allow for the addition of a limited number of private washrooms, lunch or servery areas in the premises, subject to the prior written approval of the Landlord. Tenants requiring hot water for private washrooms and servery areas must provide their own electric hot water heating system, at their sole cost and expense.

Water conservation is a priority in the Building. The following outlines the minimum specifications that must be met when designing premises:

Fixture	**Maximum Flow Requirement**			
Water Closets	6.0	(LPF)	1.6	(GPF)
Urinals	3.8	(LPF)	1.0	(GPF)
Shower Heads	9.5	(LPM)	2.5	(GPM)
Faucets	8.3	(LPM)	2.2	(GPM)
Replacement Aerators	8.3	(LPM)	2.2	(GPM)
Metering Faucets	0.95	(L/CY)	0.25	(G/CY)

Index:
(LPF) liters per flush
(LPM) liters per minute
(L/CY) liters per cycle
(GPF) gallons per flush
(GPM) gallons per minute
(G/CY) gallons per cycle

The tenant shall ensure that any fixtures purchased for use in the premises shall be certified by the *United States Environmental Protection Agency's Water Sense Program* or the Canadian equivalent, if any, and follow the *Energy Policy* Act of 1992 (or later amended), for water fixture performance requirements, or Canadian equivalent.

3.12 Electrical Systems

(a) **Lighting**

The building standard lighting system achieves a high level of energy performance though the use of modular fluorescent T8 lighting and proper spacing of luminaires. The Landlord is in the process of upgrading the base building light fixtures to a new recessed LED luminaire on "specific" floors, with exact details to be site verified. The tenant should take advantage of as much natural light as possible when designing the premises.

The tenant's lighting design must:

(i) use energy efficient fluorescent and or LED lamp sources. Incandescent lighting/lamp source are not permitted. Retrofit LED lamps should also be used.

(ii) the lighting power density should not exceed 1 watt per square foot, and incorporate task lighting where higher lighting levels are needed; lighting levels in excess of 55 foot candles are not permitted.

(iii) light levels should be designed to current OBC / ASHRAE standards and be in accordance with IES recommendations.

(iv) the cost of supplying additional fixtures will be at the tenant's expense.

(v) the removed luminaires that are not required shall be turned over to the landlord for storage, at a location designated by the Landlord. All luminaires that are rejected by the Landlord shall be removed from the site. Properly dispose of both the lamps and ballasts. All associate costs are by the tenant.

(vi) to conserve energy, the Landlord has provided a computerized lighting control system. Additions and/or modifications thereto shall be carried out by the system supplier, at the tenant's expense. Predefined lighting zones exist and may be required to be reworked when modifying light layouts and/or adding interior partitions. Exact details to be site verified.

(vii) the tenant shall provide switching (local switch, occupancy sensor, switch/sensor combination or digital controls) for all non-base building luminaires. This shall include but not limited to private offices, meeting rooms, servery, reception areas, etc. It is recommended that occupancy sensors be added to open areas to maximum energy savings.

(viii) exit signs shall be LED pictogram "green running man" to match base building standards in common areas.

(ix) all existing lighting located within base building rooms, stairwells and areas deemed not in scope shall remain live and operational. Ensure services to these areas are isolated and protected during the course of demolition and construction.

(b) **Power**

The available power density for general power receptacles at 120/208V is 2 watts per square foot of rentable space per floor. If additional power is required, the tenant shall contact the landlord for review and approval.

As part of the tenant build out, the tenant is required to install at their sole expense, a separate dedicated electrical service. The tenant shall obtain power via the existing bus duct riser located within the base building electrical rooms (Northwest and Southeast). Coordinate building shut down with Landlord as outlined in the tenant manual. All new electrical equipment (i.e., panel(s) disconnect(s), transformer(s)…etc) shall be located within the tenant premise.

The base building electrical/telephone rooms are intended only for base building/Landlord electrical and communication services and are not accessible to the tenant. Any area of this nature which the tenant requires for its own equipment or use must be provided within the leased premises. Under no condition shall these rooms be used for storage of materials.

All electrical wiring must be installed in conduit or raceway, unless an alternative is approved by the Landlord in writing.

All newly installed conduits shall be tight to slab and follow building lines (no diagonal runs).

All existing electrical devices, and equipment located within base building rooms, stairwells and areas deemed not in scope shall remain live and operational. Ensure services to these areas are isolated and protected during the course of demolition and construction.

(c) **Meters - Electrical**

The tenant is required to install, at their sole expense, Revenue grade Meter(s) supplied by the Landlords recommended supplier. Metering should be installed for the following end uses:

(i) All electrical services

(ii) Gas, Water, and Steam

(iii) Tenant mechanical units

(iv) Supplementary air conditioning units

Please refer to List of Base Building Contractors/Trades for the Landlord's designated metering contractor.

(d) **Equipment and Appliances**

Install only *Energy Star* rated equipment and appliances, including kitchen and laundry appliances, office equipment, electronics and commercial food service equipment.

3.13 Communications

The tenant, at its sole cost and expense, is required to make direct arrangements with the Landlord’s designated riser work consultant and a communications system provider for the installation of communication services to the premises. Riser rooms are located on each floor. The main communications room and conduit risers have been sized to provide capacity for most major systems. Riser rooms are not available for installation of tenant equipment. All data communication wiring in the ceiling space must be either plenum rated cable, or enclosed in conduit. Space is available in the communications rooms and in the ceiling space for tenant’s fibre optics cable systems for data transmissions. Certain telecommunication installations may be subject to a regular Landlord charge due to space, power and HVAC requirements and any telecommunications service provider which is not already providing such service in the Building may be required to execute and deliver to Landlord the Landlord’s then standard service agreement, prior to being able to introduce its services into the Building. Tenant must verify with Landlord prior to installation.

The Tenant's Contractor will be allowed to work within the base building rooms or electrical rooms, subject to the prior written approval of the Landlord, for the express purpose of providing and connecting feeder cables to the premises.

Please refer to List of Base Building Contractors/Trades for the Landlord's designated riser work consultant.

3.14 Security Systems

The tenant maintains and operates their own security systems.

3.15 Fire Alarm System

Provisions have been made to provide the tenant with a tie-in connection to the base building fire alarm system riser located in the main electrical room on every floor. The cost of such tie-in will be at the expense of the tenant. All fire alarm systems to be inspected and verified on site by the Landlord's fire alarm service contractor and signed off by the parties having jurisdiction. All requests for fire alarm system tie-in are subject to the Landlord's prior written approval and must be made in writing, in advance, with seventy two (72) hours notice to the property management office.

Please refer to List of Base Building Contractors/Trades for the Landlord's designated fire alarm service contractor.

3.16 Waste

The Base Building waste management systems can accommodate multi stream recycling. The following waste streams should be taken into consideration when designing millwork:

Kitchens/Kitchenettes/Serveries	**Photocopy Areas**	**Meeting/ Boardrooms**
- Organic Waste	- Paper	- Paper
- Cans and Bottles	- Toner Cartridges	- Cans and Bottles
- Paper	- Battery Recycling	- Waste
- Plastics and Styrofoam		- Organic waste

Each receptacle should be properly labeled according to the Building's identified waste streams.

3.17 Reuse

All materials should be evaluated for reuse on site and/or evaluated for reuse at alternate sites. This should begin at the demolition stage and continue throughout construction. Where possible, materials from demolition should be salvaged for reuse in the construction phase. The following table provides strategies to institute reuse of common materials during construction.

Material	**Reuse Strategy**
Wood	Salvage off-cuts to be used for bridging, blocking and back framing. Reuse palettes or return to vendors. Inspect wood forms to be reused to form other areas of the Building or send with formwork trade to be reused on other job sites.
Metal	Save cuttings for possible reuse. Joist off-cuts can be cut up and used as stakes for forming or for headers around openings in the floor assembly.
Drywall	Reuse off-cuts to finish off gaps, small bulkheads, etc.

Cardboard	Use boxes for storage of tools and materials or floor protection.
Masonry	Crush on site and use for fill or as bedding for driveways.
Rigid Insulation	Use as ventilation baffles in attics for in house envelopes as joist header assemblies.

Whenever possible, salvageable materials that cannot be reused on site should be taken back by suppliers or trades to be used at other sites. Alternatively, materials should be sold or donated to businesses that collect and resell used construction materials. Allowing private salvage companies access to the site can avoid removal costs.

SECTION 4.0 SUSTAINABLE OPERATING PRACTICES

BentallGreenOak operates the Building on behalf of the Landlord so as to provide for:

(a) a comfortable, productive and healthy indoor environment;

(b) reduced energy use and reduced production, both direct and indirect, of greenhouse gas emissions;

(c) reduced use of potable water;

(d) the effective diversion of construction, demolition and land-clearing waste from landfill and the recycling of waste streams;

(e) the use of cleaning products certified in accordance with *EcoLogo* (Canada), *Green Seal* (United States) or equivalent standards;

(f) the facilitation of alternative transportation options for individuals attending the Building; and

(g) the avoidance of high-VOC emitting materials, furniture and improvements within the Building and individual premises.

The following section highlights sustainable operating practices which are undertaken at the Building. This is not intended to be an exhaustive list but, rather, is a representative sample of the programs implemented by BentallGreenOak to minimize the environmental footprint of the Building.

4.1 Janitorial Services

Janitorial services for the Building are required, by contract, to reduce the exposure of all occupants and personnel of the Building to chemical contaminants that may negatively affect occupant health, air quality or the environment. This "green cleaning" contract, based on the relevant credit in LEED for Existing Buildings (LEED-EB), affects the purchase, handling, storage, disposal and standard operating procedures of all cleaning materials and equipment at the Building.

All staff are trained annually, at a minimum, so as to remain knowledgeable of the correct procedures for safety, tools, techniques and pertinent environmental standards. Training and retraining of all employees shall include, but not be limited to, the hazards, use, maintenance and disposal/recycling of cleaning chemicals, dispensing equipment and packaging.

Products and equipment used must adhere to the details specified in BentallGreenOak's Green Cleaning Policy. When applicable, the following guidelines for use of cleaning products and materials will be followed (Source: LEED Canada for Existing Buildings: Operations and Maintenance Reference Guide, 2009):

- Where chemicals are necessary, chemical concentrates are dispensed from portion-controlled, closed dilution systems;
- Hand soaps shall not contain antimicrobial agents, except where required by health codes and other regulations;
- Maintenance staff are required to perform daily surveys of the floors, and clean as necessary to increase the life of flooring surfaces;
- Wherever possible, BentallGreenOak uses floor coating products which are free of zinc;
- Core-less paper products are used in the Building;

- Cleaning solutions and by-products (e.g. floor stripping waste, empty chemical containers) should be disposed of according to details specified in product literature and according to relevant laws and regulations;
- When appropriate and hygienic, reuse wipes and towels used to clean surfaces; and
- Prior to beginning any janitorial activities using mechanized equipment (e.g. floor cleaners, buffers, wax strippers), verify the equipment is operating properly; this will increase the efficiency of the device and ensure the Building surfaces are not damaged by faulty equipment.

In addition, cleaning and hard floor/carpet products must meet the following sustainability criteria for the appropriate category *(Source: LEED Canada for Existing Buildings: Operations and Maintenance Reference Guide, 2009)*:

- *Green Seal GS-37*, for general-purpose, bathroom, glass and carpet cleaners used for industrial and institutional purposes;
- *Environmental Choice CCD-110*, for cleaning and degreasing compounds;
- *Environmental Choice CCD-146*, for hard surface cleaners; and
- *Environmental Choice CCD-148*, for carpet and upholstery care.

Disinfectants, metal polish, floor finishes, strippers or other products not addressed by the above standards, must meet one or more of the following standards for the appropriate category:

- *Green Seal GS-40*, for industrial and institutional floor care products;
- *Environmental Choice CCD-112*, for digestion additives for cleaning and odour control;
- *Environmental Choice CCD-113*, for drain or grease traps additives;
- *Environmental Choice CCD-115*, for odour control additives; and,
- *Environmental Choice CCD-147*, for hard floor care.

All newly purchased cleaning equipment to be used in the Building must meet the requirements outlined in BentallGreenOak's Sustainable Cleaning Equipment Program. The janitorial contractor, in cooperation with BentallGreenOak, will be responsible for ensuring all members of its cleaning staff are aware of, and comply with, these guidelines, and those specified in BentallGreenOak's Green Cleaning Policy.

4.2 Sustainable Cleaning Equipment Program

(a) **Guidance for Resources and Implementation**

(i) Vacuum cleaners meet the requirements of the *Carpet and Rug Institute "Green Label" Testing Program - Vacuum Cleaner Criteria* and be capable of capturing 96% of particulates 0.3 microns in size and operate with a sound level less than 70dBA.

(ii) Equipment purchases take indoor air quality into consideration, such as using HEPA filters on vacuums.

(iii) Carpet extraction equipment used for restorative or deep cleaning carpets is certified by *the Carpet* and Rug Institute's "Seal of Approval" Testing Program for deep-cleaning extractors.

(iv) Powered maintenance equipment, including floor buffers and burnishers, are equipped with vacuums, guards and/or other devices for capturing fine particulates, and shall operate with a sound level less than 70 dBA.

(v) Propane-powered floor equipment has high-efficiency, low-emission engines with catalytic converter and mufflers that meet *California Air Resources Board* or *U.S. Environmental Protection Agency* standards for the specific engine size. Applicable equipment operates with a sound level of less than 90 dBA.

(vi) Automated scrubbing machines are equipped with variable-speed feed pumps to optimize the use of cleaning fluids. Alternatively, the scrubbing machines use only tap water with no added cleaning products.

(vii) Battery-powered equipment is equipped with environmentally preferable gel batteries.

(viii) Where appropriate, active micro fiber technology is used to reduce cleaning chemical consumption and prolong life of disposable scrubbing pads.

(ix) Powered equipment is ergonomically designed to minimize vibration, noise and user fatigue.

(x) Equipment is equipped with safeguards, such as rollers or rubber bumpers, to reduce potential damage to Building surfaces.

A log is kept for all powered housekeeping equipment to document the date of equipment purchase and all repair and maintenance activities. Include vendor cut sheets for each type of equipment in use in the log book.

(b) **IAQ Management**

BentallGreenOak adheres to an IAQ Management Plan. The goal of the IAQ Management Plan is to protect existing and future Building occupants and construction personnel from indoor air quality problems resulting from construction/renovation activities. This plan applies to all components of Building operations including, but not limited to, base building carpet and paint specifications, air filter specifications, fresh air volumes and CO_2 levels.

4.3 Integrated Pest Management Plan ("IP Management Plan")

(a) **Goals**

The goals of the IP Management Plan are to reduce exposure of Building occupants and maintenance personnel to potentially hazardous chemical, biological, and particle contaminants.

(b) **Guidance for Resources and Implementation**

(i) BentallGreenOak's pest management contractor shall employ low impact pest management practices including: integrated methods; site and pest inspections; pest population monitoring; an evaluation of the need for pest control; and implementation of various pest control methods.

(ii) Integrated methods are combinations of environmentally sensitive strategies used to manage pests. Regular visual inspections shall be conducted to monitor both the presence of pests, and effectiveness of current preventative measures. Preventative measures are both cost-effective and provide minimal risk to Building occupants.

(iii) Where possible, preventative measures shall include:

(A) avoiding landscaping strategies that provide a haven for pests to breed;

(B) regularly inspecting sealant and exterior cladding conditions to identify cracks or crevices through which pests may enter;

(C) using insect and rodent traps throughout Building;

(D) ensuring food-service areas and break rooms are kept clean and waste kept in airtight containers;

(E) promptly fix dripping faucets or leaking pipes; and

(F) educating occupants to clean recycled containers before putting them into the blue box.

(iv) Presence of pests must be visually confirmed before chemical use is considered. An acceptable threshold for each pest population shall be determined by the pest management contractor. After visual confirmation that this threshold has been exceeded, means of managing the pests shall be considered. The pest management contactor shall minimize use of pesticides wherever possible by visually confirming the presence of pests and trying to physically remove them before resorting to pesticide use. Removal options include: sanitation; structural repairs; mechanical and living biological controls; other non-chemical methods and, if nontoxic options are unreasonable and/or have been exhausted, the least toxic pesticide shall be considered.

(v) Any pesticides that satisfy the following criteria are considered least toxic:

(A) products listed as least toxic in the *LEED Canada for Existing Buildings; Operations and Maintenance Reference Guide, 2009, Credit 3.6: Green Cleaning: Integrated Pest Management*;

(B) Products listed as "Allowed" on the *Society for Urban Land Care's Organic Urban Land Care Standard, Fourth Edition, 2007, List 2*; and

(C) products that satisfy San Francisco's Tier 3 hazard criteria.

(vi) Application of a pesticide other than *a least toxic* pesticide shall only be permitted under the following circumstances, all of which shall be deemed, for the purposes hereof, to be "emergency situations":

(A) when there is a threat of immediate danger to human life;

(B) where use of pesticide is necessary to destroy a health hazard; and

(C) where use of pesticide is necessary to control termites or prevent serious property damage caused by pest infestation.

(c) **Notification**

Notification of planned pesticide use is to be provided to all occupants of the Building:

(i) seventy-two (72) hours prior to use under normal conditions; and

(ii) twenty-four (24) hours prior to use in emergency situations (see subsection 4.2(b)(vi) above).

Building occupants should be notified using appropriate methods (e.g. email for office workers, posted signs for maintenance staff, second-language notices as necessary) so that the notice reaches all potentially affected occupants.

Notification must include the pesticide product name, active ingredients, product label signal word (e.g. "caution", "danger"), the time and location of the application, and contact information for persons seeking more information (Source: LEED Canada for Existing Buildings: Operations and Maintenance Reference Guide, 2009).

(d) **Site Animal and Vegetation Pest Control**

(i) To minimize the use of toxic chemicals which pose a health risk to other animals, plants and humans, BentallGreenOak recommends the implementation of the IP Management Plan. This requires the use of least-toxic chemical pesticides and herbicides, with minimum chemicals used only in target locations, and only for targeted species. The IP Management Plan requires regular inspections and monitoring of the presence of pests and the effectiveness of current preventative measures. Where possible, preventative measures shall include:

(A) improved sanitation and management of pest attractants;

(B) removal of landscape features that may harbor pests;

(C) use of appropriate biological controls;

(D) regular inspection of exterior hardscape and Building envelope to identify cracks or crevices through which pests may enter.

(ii) This practice aims to avoid unnecessary pesticide use. As per Ontario law, pesticides are banned unless written documentation demonstrates the pests have been present for two (2) years. Should the need arise, preferred organic pesticides are those manufactured by Eco Solutions. Outdoor pest management should follow all requirements outlined in BentallGreenOak's interior IP Management Plan including:

(A) preferred use of non –chemical methods; and

(B) a definition of emergency conditions.

4.4 Solid Waste Management Plan

The solid waste management plan applies to the disposal of all materials at the Building, including ongoing consumables, durable goods and materials/products related to facilities alterations and additions.

(a) **Goals**

BentallGreenOak is committed to the environment and has implemented a comprehensive Solid Waste Management Policy. The goals of this policy are to:

(i) divert from landfill or incineration, or recycle, at least 50% of the ongoing consumables waste stream;

(ii) collect and recycle at least 80% of batteries used;

(iii) collect and recycle all discarded fluorescent light bulbs;

(iv) divert/recycle at least 75% of the durable goods waste stream;

(v) divert/recycle at least 70% of waste (by volume) generated by the qualifying facility alterations or additions from landfill or incineration; and

(vi) divert/recycle 100% of products containing toxic materials from landfill or incineration.

(b) **Strategies/Procedures**

(i) **Ongoing Consumables and Fluorescent Bulbs**

BentallGreenOak shall provide its tenants and employees with easy-to-use, openly visible recycling containers for the following ongoing consumables, i.e. materials with a low cost per unit that are regularly used and replaced through the course of business. Separate containers shall be provided for the collection of batteries, fluorescent light bulbs and toner cartridges.

- Paper
- Food and Packaging Waste
- Waxed Paper
- Styrofoam Products
- Glass
- Plastics
- Cardboard/Old Corrugated Cardboard
- Metals
- Batteries
- Fluorescent Light Bulbs
- Toner Cartridges

The Building has storage facilities for all the above materials located in the loading dock on the ground floor. BentallGreenOak has active contracts with hauling facilities to remove recyclable materials, batteries, fluorescent bulbs and toner cartridges.

(ii) **Durable Goods**

Durable goods are products that are replaced infrequently and/or may require capital program outlays to purchase. These include, but are not limited to the following:

- Office equipment (computers, monitors, copiers, printers, scanners and fax machines);
- Appliances (refrigerators, dishwashers and water coolers);
- External power adapters; and,
- Televisions and other audiovisual equipment.

BentallGreenOak acknowledges that many durable goods, such as electronic devices and appliances, contain hazardous and toxic materials that must be kept out of the waste stream. To manage and control the disposal of these products and materials, BentallGreenOak provides storage and disposal services for non-functioning products containing toxic or hazardous materials. BentallGreenOak contracts hauling companies to dispose of toxic and hazardous materials according to applicable laws and regulations.

For used durable goods still in good working condition, including electronics and office furniture, BentallGreenOak will provides tenants with opportunities to donate these products to charitable organizations.

(iii) **Facilities Alteration and Additional Materials**

BentallGreenOak and all tenants of the Building are to employ waste reduction/diversion measures for any retrofit, renovation or modification occurring at the Building. This applies to base building elements permanently or semi-permanently attached to the Building itself that enter the waste stream during facility renovations, demolitions, refits and new construction additions. Examples include, but are not limited to, building components and structures (wall studs, insulation, doors and windows), panels, attached finishings (drywall, trim, ceiling panels), carpet and other flooring material, adhesives, sealants, paints and coatings. This excludes furniture, fixtures and equipment, as well as mechanical, electrical and plumbing components.

This policy also requires BentallGreenOak to integrate these measures into all contract and construction documents, requiring contractors and sub-trades to adhere to the policy. Contracts include stipulations for accountability and incentives to meet waste reduction goals, specifying at least 70% waste diversion through recycling and/or reuse.

4.5 Building Exterior and Hardscape Management Plan

This plan incorporates procedures to encourage building exterior and landscape management practices that have the lowest environmental impact possible while providing a clean, well maintained and safe building exterior.

(a) **Landscaping Equipment**

BentallGreenOak aims to minimize maintenance equipment impacts such as noise and emissions by using only hand-powered equipment. No leaf blowers or motorized lawn mowers are used at the site. Hand tools such as rakes, cultivators, wheelbarrows, and shears are used on site.

(b) **De-Icing Products**

The following least toxic deicing products are used at the Building:

Product Name (Manufacturer)	Application	Sustainability Criteria
Artic Eco Green Icemelter (Xynyth)	Anti-icing, Granular De-icer	All natural ingredients, reduced corrosion potential
Winter Warrior Runway Control Icemelter (Xynyth)	Anti-icing, De-icer	Biodegradable, non-corrosive chloride and urea free

(c) **Drought Tolerant Plants**

All landscaped areas around the Building are planted with perennial foliage that requires a minimal amount of watering.

(d) **Building Exterior and Hardscape Cleaning**

The site uses best practices to minimize the environmental impacts from cleaning the Building exterior surfaces and hardscape (sidewalks, pavement, etc). Where required, products used shall comply with the requirements stated in BentallGreenOak's Green Cleaning Policy and will be utilized per manufacturer instructions. Cleaning products shall be used efficiently to minimize both water use and the quantity of chemicals in the runoff from the site. The frequency of Building exterior cleaning is minimized to reduce the use of water and cleaning products while ensuring the maintenance associated with a first class office building. Power washing shall be used sparingly, and it shall be used only after manual methods for cleaning have been used.

To ensure the safety of pedestrians on the site, sidewalks and paved surfaces are cleaned to remove leaves, litter, sediment and other debris. Cleaning of these areas is performed only as required to renew their appearance. Plan sweeping and garbage removal are performed frequently.

(e) **Exterior Paints and Sealants**

Products used to maintain the Building façade, including paints, coatings, and sealants must adhere with the VOC requirements of the most relevant standard:

- SCAQMD Rule #1168 Adhesives and Sealants;
- Green Seal 11 Paints and Coatings; or,
- SCAQMD Rule #1113 Architectural Coatings

The MSDS for any products to be used on the Building exterior must be submitted to BentallGreenOak, for prior written approval, at least two (2) weeks prior to use. If the proposed product(s) are deemed unacceptable, the contractor shall be responsible for identifying and submitting MSDS's for replacement products. Products may only be used if they have been approved by BentallGreenOak based on the relevant standard VOC limits.

(f) **Landscape Waste**

The *Environmentally Responsible Landscaping* policy outlines BentallGreenOak's landscape waste reduction policy. At least 95% of landscape waste must be diverted from the waste stream via mulching, composting, or other low impact means (*Source: LEED Canada for Existing Buildings: Operations and* Maintenance *Reference Guide, 2009*).

(g) **Chemical Fertilizer Use**

BentallGreenOak's *Environmentally Responsible Landscaping* policy outlines strategies that reduce chemical fertilizer use at the Building. BentallGreenOak strives to minimize its contribution to the contamination of groundwater and degradation of lake, river, and stream ecology. As such, BentallGreenOak recommends using locally adapted plants that need no fertilizer. Where fertilization is necessary, less-polluting alternatives to chemical fertilizers shall be employed.

Products listed as prohibited by the *Society for Organic Urban Land Care's Organic Land Care Standard, Fourth Edition, 2007, List 1* are not to be used on BentallGreenOak properties.

Our landscapers use organic fertilizers instead of chemical fertilizers.

4.6 Greenhouse Gas Emission Tracking

BentallGreenOak has developed an innovative tool for tracking overall greenhouse gas emissions on a property by property basis and then benchmarking performance against other BentallGreenOak buildings across Canada.

The EcoTracker ™ tool utilizes utility and waste statistics to calculate an overall carbon emission (tCO_2e). Through the various measures, the Building is able to analyze utility and waste generation data and assess trends and/or opportunities related to reduction strategies.

Appendix "A"

TENANT GREEN DESIGN GUIDE FOR COMMERCIAL INTERIORS

Revised February 25, 2013

Bentall Kennedy
FOREVERGREEN

TABLE OF CONTENTS

1. INTRODUCTION

This Tenant Green Design Guide for Commercial Interiors is supplemental to, and is intended to be read and used in conjunction with, the buildings' Tenant Design Criteria Manual . This guide provides general information regarding the greening of building office space.

The Lease and any other agreement(s) between the tenant and landlord of the building shall govern and take precedence over any information included in the Tenant Design Criteria Manual and this Tenant Green Design Guide.

This guide uses the term green design to indicate environmentally friendly preferences in design and tenant improvement decisions.

Bentall Kennedy is one of Canada's leading proponents of green office space, and as such, this guide has a number of measures that all tenant improvements are required to follow. Additionally, a list of recommended, or stretch, targets has also been provided. The required and recommended targets are identified by the following icons:

A summary of all the required and recommended targets is included in Section 9.

How to Use this Guide

Asset managers, property managers, engineers, leasing agents, construction managers, and members of design/construction teams should use this manual as a tool to initiate discussion and facilitate the implementation of sustainable tenant improvements (TI)s.

When bidding out TI projects, this manual should be provided to contractors, architects/designers, and other responsible parties. It may be appropriate to include some of the requirements and recommendations in various project documents such as the construction contract, specifications and scope of work letter.

Bentall Kennedy does not recommend or require any specific products or manufacturers as long as the sustainability requirements are met. However, Bentall Kennedy suggests using proven companies that provide market-leading services and products. Where possible, sample products that meet the given sustainability criteria are identified in this guide. The project team (i.e., property manager, construction manager, architect etc.), in consultation with the asset manager, should select the most appropriate sustainable option for the building's office space, given financial, environmental, and social considerations. Property managers may have a list of vendors that have already been successfully used at the building, or at other buildings within their market.

2. WHY A GREEN DESIGN?

It is well documented that more than 30% of the global energy produced and 60% of the electricity generated is consumed by buildings annually. A typical North American commercial construction project generates up to 1.13 kilograms or 2.5 pounds of solid waste per square foot of occupied floor space.

A green design not only has a positive impact on public health and the environment, it reduces operating costs, enhances employer organizational marketability, has the potential to increase occupant productivity and demonstrates a commitment to a sustainable community. Beyond that, it contributes to a sustainable environment by reducing our energy and natural resource consumption and cutting down on the waste and pollution we create.

Many leading organizations consider the impact their workplaces have on a range of financial drivers. A green design can assist in securing a competitive advantage in the following areas:

- Enhance company reputation
- Attract and retain the best employees
- Enhance employee wellbeing and productivity
- Enhance and protect organizational knowledge
- Reduce Liability

Some of the economic benefits of a green building are:

- Fewer employee sick days taken and heightened worker productivity due to improved indoor environment
    - Research[1] on the effects of improved indoor air quality has shown it can lead to an average productivity increase of 2% (roughly $5/ft^2), and on average one less sick day per employee annually (roughly $1.5/ft^2)
- Lower utility bills and operating costs because of energy and water efficiency systems
- Lower waste and dumping costs because of landfill diversion measures (recycling/reuse programs) used during construction and occupancy
- Lower energy bills from efficiencies in HVAC systems

[1] Miller, N.G., Pogue, D., Gough, Q.D., and S. Davis, 2009. Green Buildings and Productivity. Journal of Sustainable Real Estate, Vol. 1, No. 1. http://www.costar.com/josre/JournalPdfs/04-Green-Buildings-Productivity.pdf

3. GETTING STARTED

Whether you have an in-house team that serves your facility design needs or you rely on outside firms to assist you, it is paramount that you select design consultants that are wholly committed to a green design. Once your design team is established choose other advisors (including engineers, suppliers, commissioning services and contractors) that are equally engaged in environmental best practices.

Key considerations in a green design include:

- Energy efficiency in mechanical and electrical installations that address thermal considerations, noise and indoor air quality requirements and flexibility and privacy needs
- Environmentally friendly interiors that support healthy work environments and avoid / minimize harmful emissions
- Effective Waste Management practices and indoor environmental controls during renovation work

This document includes a number of initiatives and strategies that should be considered when arranging service agreements and construction documents and will assist you in developing and refining plans and specifications that achieve your green design goals.

Often the first question asked is "What is the cost of a green design?" Many measures can be implemented with no additional cost while others may involve minimal upfront costs but will save money over the long haul. Some green measures may cost considerably more, but yield benefits that are more difficult to quantify, such as improved productivity. In all cases, the key to eliminating or minimizing additional costs is to establish your design team and set your goals very early in the process.

4. WATER EFFICIENCY

REQUIRED	Low flow water fixtures
RECOMMENDED	Lower flow water fixtures

It is important to consider reducing our consumption of this resource in order to ease the burden on water and sewer infrastructure systems in our cities. Through green design you can maximize water efficiency within your space to reduce the burden on water supply and waste water systems.

Installation of low flow water fixtures is required to reduce potable water consumption by at least 20% over a typical new installation. Use the flow rates provided in the table below as a guide to achieve this goal. For project teams that wish to further minimize their water consumption, stretch goals are also provided.

REQUIRED

Fixture Type	Maximum Flows (Required)				Stretch Goals (Recommended)			
	Metric		Imperial		Metric		Imperial	
Water Closets	4.8	LPF	1.28	GPF	3/6 dual fl	LPF	0.8/1.6 dual fl	GPF
Urinals	1.9	LPF	0.5	GPF	Below 1.9 LPF down to and including waterless			
Shower Heads	7.6	LPM	2.0	GPM	5.7	LPM	1.5	GPM
Washroom Faucets	1.9	LPM	0.5	GPM	Lower flow may impact performance			
Kitchen Faucets (replacement aerators)	7.6	LPM	2.0	GPM	5.7	LPM	1.5	GPM
Metering Faucets	0.95	L/CY	0.25	G/CY	Lower flow may impact performance			

Index:
(LPF) liters per flush (LPM) liters per minute (L/CY) liters per cycle
(GPF) gallons per flush (GPM) gallons per minute (G/CY) gallons per cycle

Choose the most efficient water consuming fixtures available when installing new fixtures, whether these are for a kitchen, private bathroom, employee gym, etc. Technologies are changing at a rapid pace so ensure your consultants incorporate the best available in your green design.

5. ENERGY EFFICIENCY

REQUIRED	**Lighting**	New lighting must be no more than 10.06 W/m² (0.935 W/ft²)
		One lighting control strategy using occupancy or daylight sensors
	Energy	HVAC and lighting to comply with ASHRAE Standard 90.1-2007
	Refrigerants	No new CFCs; existing CFCs must have phase-out plan
	Equipment	Install only Energy Star rated equipment and appliances
RECOMMENDED	**Lighting**	Provide lighting controls (desk lamps) to 90% of occupants
		New lighting to be more efficient than the above requirement
	Refrigerants	No new equipment to use HCFCs
	Measurement	Install metering to measure and record utility consumption
	Commissioning	Engage a commissioning authority
	Green Power	Offset 50% of annual electricity with offsite green power purchase

5.1 Lighting

Understandably, a lot of emphasis goes into designing premises lighting in a green design. After all, it accounts for more than 60% of total premises energy costs and represents the largest single opportunity for savings. The building's standard lighting system already achieves a high level of energy performance though the use of T8 lighting.

Any changes to the lighting system should be designed to reduce the lighting power by 15% below that allowed by ASHRAE 90.1-2007. That standard has an allowance of 11.84 W/m² (1.1 W/ft²) for office space, therefore a 15% reduction equates to 10.06 W/m² (0.935 W/ft²).

! REQUIRED

To minimize lighting energy use, four main strategies should be used:

1. Maximize natural light,
2. Provide directed task light where required,
3. Install efficient fixtures and lamps and
4. Use advanced lighting controls.

An added benefit to lowering the energy use in lighting systems is the reduction in localized heat loads which enhances occupant comfort and minimizes the amount of cooling energy required.

Natural Light

Taking advantage of as much natural light as possible, and minimizing the use of electric lights, should be the initial focus. This can be accomplished through use of open floor plan offices, low height partitions and furniture, and locating private offices and meeting rooms away from the perimeter and towards the core of the building. Additionally, specifying the use of lighter coloured paints and surfaces increases the rebounding of light rays and reduces the amount of electric light required to obtain a certain ambient lighting level.

Task Lighting

Building occupants have different lighting needs at different times. Providing the appropriate level of lighting for different tasks reduces energy use, compared to centrally-controlled overhead lighting, which lights the entire tenant space for the task requiring the highest lighting level. Individual lighting controls also increase occupant satisfaction and comfort with light levels.

Consider providing individual lighting controls for at least 90% of occupants to enable adjustments to suit individual task needs and preferences. This can be achieved cost-effectively through task lighting (ie: desk lamps) at individual workstations and offices, or controllable lights built into system furniture, allowing the amount of overhead lighting provided to be reduced.

RECOMMENDED

In addition, consider providing separate lighting system controls for all shared multi-occupant spaces (e.g., meeting rooms, conference rooms) to enable adjustments to suite the various uses of the room.

Fixtures and Lamps

Energy efficient solutions are flooding the marketplace at an increasing rate and your design team is crucial to ensuring the latest technologies are used.

A green design for lighting incorporates many elements, the highlights of which are detailed below:

- Use energy efficient fluorescent lights with electronic ballast (less than 10W/m^2 or 0.93 W/ft^2) for general office lighting
- Use 25W or 28W T8 fluorescent tubes, or LEDs.
- For special purpose lighting, use compact fluorescents (CFLs) or LED's, instead of halogen or MR-16s.
- Use fixtures and lamps which carry the Energy Star logo.

Lighting Controls

Lighting controls are a cost-effective energy efficiency solution. Because the need for lighting varies with occupancy and daylight levels, lighting controls save energy by turning off or dimming lights when they are not needed. They also enhance occupant comfort by not over-lighting spaces.

Daylight-responsive controls (also known as photosensors or photocells) sense the amount of daylight present and turn off or dim lights when they are not needed.

Occupancy or motion sensors detect movement in a space and respond by either keeping the lights on (when movement is detected) or turning off or dimming lights (when the space is unoccupied).

Combination daylight/occupancy sensors are also available.

Incorporate at least one of the following three control strategies:

- Install daylight-responsive controls in regularly occupied spaces that are within 4.6 m (15 ft) of windows and under skylights.
- Install daylight responsive controls for 50% of the lighting load.
- Install occupancy sensors for 75% of the lighting load.

REQUIRED

Ensure that occupancy sensor "time to off" is set as low as possible – e.g. 5 minutes, rather than the pre-set 30-45 minutes.

Through effective use of the above three elements, additional savings above the minimum 15% reduction can be achieved. Aim for stretch goals (recommended targets) of:

- 8.88 W/m^2 (0.825 W/ft^2); 25% below standard
- 7.70 W/m^2 (0.715 W/ft^2); 35% below standard

RECOMMENDED

5.2 Equipment and Appliances

Install only Energy Star rated equipment and appliances. Relevant equipment includes:

- Office equipment: computers, monitors, printers, scanners, copiers, fax machines, digital duplicators, servers, external power adapters, mailing machines, and water coolers
- Appliances: refrigerators, freezers, and dishwashers
- Electronics: TVs, DVD players, projectors, and combination units
- Commercial food service equipment

REQUIRED

Equipment that is being reused from another location is exempt from this requirement. Also excluded from this requirement are HVAC, lighting, and building envelope products, which all should be encompassed in the overall energy efficiency strategy for the TI.

Almost all leading brands carry ENERGY STAR qualified products. Product listings can be found at www.energystar.gov/products.

Ensure equipment and computers are turned off when not in use.

5.3 Minimum Energy Performance

Design the tenant improvement project to comply with ASHRAE Standard 90.1-2007, where applicable (including lighting and HVAC system). This includes the mandatory provisions (Sections 5.4, 6.4, 7.4, 8.4, 9.4 and 10.4), and either the prescriptive requirements (Sections 5.5, 6.5, 7.5 and 9.5) or performance requirements (Section 11) of the ASHRAE standard. The standard covers measures related to minimum efficiency of and controls for HVAC, lighting, and water heating equipment. More information can be obtained at www.ashrae.org.

REQUIRED

5.4 Heating Ventilation and Air Conditioning:

A successful green design for HVAC is often conditional on the base building capacities and systems. Where feasible:

- Provide for separate control zones in every room or area with a solar exposure
- Zone interior spaces separately
- Install controls and systems capable of sensing space use and modulating HVAC systems in response to space demand. This includes private offices and specialty occupancies (conference rooms, kitchens, etc.)

5.5 Refrigerants

The federal government is phasing out ozone-depleting chlorofluorocarbons (CFCs) in HVAC systems. Implement any of the following strategies that apply to your Tenant Improvement project:

- When installing new systems and products or replacing existing systems as part of the tenant's scope of work, the new systems must not contain CFCs.
- When reusing existing HVAC systems in the tenant's scope of work, inventory equipment and identify any that use CFC-based refrigerants, with the goal of phasing out the CFC-based refrigerant in the future.
- Consider also excluding hydrochlorofluorocarbons (HCFCs) from new installed systems. HCFCs are a less hazardous choice than CFCs but also have environmental impacts.

REQUIRED

RECOMMENDED

Small HVAC units, standard refrigerators, small water coolers and any other cooling equipment that contains less than 0.22 kg (0.5 lbs) of refrigerant are exempt.

5.6 Construction and Commissioning

The construction phase begins once you have a contract with the contractor you have selected. It ends when the project is complete and ready for occupancy. The last step prior to occupancy should be a commissioning period.

A project cannot be deemed a success until proven with written verification that confirms the project's mechanical, HVAC and electrical systems are installed and calibrated and performance is validated to the intended design. This verification process is completed by a commissioning team and should be included as part of your project work.

Consider engaging a designated commissioning authority and include commissioning requirements for HVAC, lighting systems and controls, hot water, and renewable energy (if applicable) in contract documents. At a minimum, the engineer and/or contractor should perform basic testing and balancing if any changes are made to HVAC systems during the TI, and should perform a review and sign-off on any affected building systems prior to occupancy.

RECOMMENDED

For added value, consider performing fundamental or enhanced commissioning, as appropriate for complex systems.

5.7 Green Power

Bentall Kennedy encourages tenants to purchase green power that has met Green-e certification requirements. Renewable Choice Energy offers a bulk discount for Bentall Kennedy tenants.

RECOMMENDED

Green power is produced off-site from renewable energy sources such as solar, wind, geothermal, biomass, or low impact hydropower, and delivered to the grid. Purchasing green power helps to reduce the negative impacts of fossil fuel use and supports the creation of a robust infrastructure for clean, renewable energy.

Green power purchase costs vary by market and type; see the Information and Resources section for additional information.

A general suggested guideline is to purchase 50% of the annual electricity used by your office, for two years, from a green power source (i.e. annual electricity use x 50% x 2 years).

5.8 Energy Measurement

The ability to track energy consumption within the premises is a key step in energy conservation and awareness. It allows ongoing accountability and optimization in energy performance over time.

Consider installing metering equipment that measures and records consumption within your space on all electrical, gas and water services. Energy usage monitoring will allow you to identify, influence and see the results of any energy programs and initiatives you undertake. Many companies are actively engaging their employees to reduce their carbon footprint (energy use and travel). Likewise, Bentall Kennedy has tenant engagement programs available to encourage and promote occupants to help reduce the building's energy and waste consumption.

RECOMMENDED

For tenants that occupy a significant portion (e.g., more than 75%) of the total building, installing continuous metering is recommended to isolate and analyze energy performance of the following systems:

RECOMMENDED

- Lighting systems and controls
- Constant and variable motor loads
- Variable frequency drive (VFD) operation
- Chiller efficiency at variable loads (kW/ton)
- Cooling load
- Air and water economizer and heat recovery cycles
- Air distribution static pressures and ventilation air volumes
- Boiler efficiencies
- Building-related process energy systems and equipment
- Indoor water riser and outdoor irrigation systems

Engage a qualified contractor to assist with the metering system design and installation.

6. HEALTHY AND ENVIRONMENTALLY FRIENDLY INTERIORS

REQUIRED	**New Materials**	Recycled content (post + ½ pre) is at least 10%
		CRI Green Label+ Carpet and FloorScore hard flooring
	Recycling	Recycling and organics bins wherever waste bins are provided
	Paints	Use low VOC paints, sealants, coatings, and adhesives
	Composites	Composite wood must not contain added urea-formaldehyde
	Indoor Air	Air quantities as per Sections 4 through 7 of ASHRAE 62.1-2007
	Comfort	HVAC designed to meet ASHRAE 55-2004
RECOMMENDED	**New Materials**	Recycled content (post + ½ pre) is at least 20%
		10% extracted and 20% manufactured regionally
		50% of wood based materials to be from FSC wood
		5% of materials to be rapidly renewable
	Layout	Locate open work spaces and offices around perimeter
	Furniture	Specify Greenguard Certified furniture
	Comfort	Provide thermal controls to 50% of occupants
	Pollutants	Specialty ventilation, entrance mats, high efficiency filters
	Cycling	Secure bike storage for 5% of employees, showers for 0.5%

6.1 Minimum Indoor Air Quality

A major component of overall indoor environmental quality, Indoor Air Quality (IAQ) is especially important to occupant health.

Require that the mechanical engineer design the ventilation systems to meet the minimum requirements of Sections 4 through 7 of ASHRAE Standard 62.1-2007, Ventilation for Acceptable Indoor Air Quality. They should modify or maintain the existing building outside-air ventilation distribution system to supply at least the outdoor air ventilation rate required by ASHRAE. If that is not possible, they should document the applicable space and system constraints, and achieve the maximum possible airflow with a minimum of 4.72 L/s (10 ft^3) per person.

REQUIRED

6.2 Thermal Comfort

Comfortable building occupants are healthier and more productive. A well-designed HVAC system is able to meet comfort criteria (air temperature, radiant temperature, air speed, and relative humidity) under normal operating conditions.

Evaluate these criteria together and coordinate system design with the requirements of "Minimum Indoor Air Quality" in order to meet ASHRAE Standard 55-2004, and demonstrate design compliance in accordance with documentation outlined in Section 6.1.1 of that standard.

REQUIRED

Building occupants have a wide range of preferred thermal comfort zones. By allowing individuals to adjust their thermal conditions (including temperature and ventilation), tenants can provide improved comfort and satisfaction for their employees.

Providing these controls is straight forward in some buildings, but very difficult in others, depending on the office layout and HVAC system. Some common types of individual controls include diffusers in underfloor HVAC systems, and operable windows. If these systems are present in your office, consider providing controls to 50% of occupants, and provide controls for shared and multi-occupant spaces (such as conference rooms).

RECOMMENDED

This suggestion should be balanced with the energy efficiency goals of the building, since allowing individuals to control temperatures and ventilation has the potential to impact HVAC operations and the associated energy usage. Integrating occupancy sensors into the thermal comfort controls – so that the systems can automatically be set back when the space is unoccupied – can help avoid a potential energy consumption increase.

6.3 Sourcing of New Materials

The most environmentally friendly material is the one that you do not need to purchase. Review both your previous office space as well as the new location for any materials, furniture, and finishes that can be reused. See the Waste Management section of this guide for information and suggested targets for material reuse.

When new materials and products are required, there are a number of environmentally friendly properties which you can request or specify them to contain. The use of these materials can greatly reduce the environmental impact of your project. These properties are briefly described below.

Recycled Content

Recycled content may include post-consumer and/or pre-consumer materials:

- Post-consumer material: generated by households or facilities in their role as end-users of the product, which can no longer be used for its intended purpose (such as plastic bottles or aluminum cans).
- Pre-consumer material: diverted from the waste stream during the manufacturing process. An example of this is sawdust from a lumber mill that a manufacturer purchases to use in its composite wood products.

Select materials, including furniture and furnishings[2], with recycled content such that: (post-consumer recycled content) +1/2 (pre-consumer recycled content) is at least 10% of total value of all materials used for the project.

REQUIRED

The recycled content value of a material or product is determined by weight. The recycled fraction of the product is then multiplied by the cost to determine the recycled content value. Mechanical, electrical and plumbing components cannot be included in this calculation.

As a stretch goal, consider requiring at least 20% of total value of materials used to be from recycled content.

RECOMMENDED

[2]Furnishings consist of miscellaneous items such as casework, countertops, window treatments, entrance mats/rugs, planters, and waste receptacles; whereas furniture refers to standard items such as seating, work stations, and tables.

Regional Materials

Consider specifying regional manufactured and extracted materials. These properties help to reduce the project's environmental impacts by reducing the transportation required to deliver the products to your project, while supporting the regional economy. Consider recommended targets of specifying a minimum of:

- 10% (by cost) of the combined value of construction materials and furniture to be extracted within 800 km of the project site, and
- 20% to be manufactured within 800 km of the project site.

RECOMMENDED

Certified Wood

Choosing FSC-certified wood ensures that wood products do not come from protected natural forests or habitats and were not treated with highly hazardous pesticides. Consider specifying a minimum of 50% (by cost) of wood based construction materials and furniture/furnishings to be from FSC-certified wood.

RECOMMENDED

Rapidly Renewable Materials

Use building products made from rapidly renewable materials (those harvested on a 10-year or shorter cycle). These may be available for little to no cost premium and can include:

- Wool carpet in place of carpet made from synthetic materials
- Bamboo or cork flooring in place of hardwood
- Linoleum flooring in place of vinyl
- Cotton batt insulation in place of fiberglass
- Wheatboard, strawboard, or sunflower seed board in place of typical composite wood

A suggested stretch goal is for the value of rapidly renewable materials to equal at least 5% of the total materials cost. This includes construction materials, furniture and furnishings, and other products.

RECOMMENDED

6.4 Floor Materials

Floor finishes have the greatest single environmental impact of any fixed item over the life of a typical tenant's occupancy timeframe. This is due to a tendency to replace floor materials at the end of every lease cycle. If reusing existing floor finishes is not possible or practical, many environmentally friendly options are available at similar and often lower cost than typical selections. Some examples:

- Use modular carpets, reconditioned options or those with high recycled content
- Choose low emissions products
- Use linoleum (a rapidly renewable materials) instead of vinyl
- Select carpets from vendors who will take back the product for recycling at the end of its useful life.

The following requirements must be met when specifying new flooring materials:

- All carpet must meet the requirements of the Carpet and Rug Institute (CRI) Green Label Plus, and carpet cushion must meet the requirements of the CRI Green Label program.
- All carpet adhesive must have less than 50 g/L VOC content. Other flooring adhesives and finishes must meet the requirements of Low-Emitting Adhesives/Sealants and Paints/Coatings detailed below.

REQUIRED

6.5 Coatings, Sealants, Paints, and Adhesives

Minimize the amount of volatile organic compounds (VOC) in coatings, sealants, paints, and adhesives that are specified. This contributes to a healthier and more pleasant work environment for staff, especially at the beginning of your occupancy. Avoid the use of vinyl wall coverings as much as possible as most tend to have a high VOC content.

To promote good IAQ, use building materials and products with VOC content no greater than those shown in the table below[3]. The VOC contents of a product can be readily obtained from its Material Safety Data Sheet (MSDS), provided by the manufacturer. Low VOC products are typically available at no cost premium.

REQUIRED

Architectural Applications	VOC Limit [g/L less water]	Specialty Applications	VOC Limit [g/L less water]
Indoor Carpet Adhesives	50	PVC Welding	510
Carpet Pad Adhesives	50	CPVC Welding	490
Wood Flooring Adhesives	100	ABS Welding	325
Rubber Floor Adhesives	60	Plastic Cement Welding	250
Subfloor Adhesives	50	Adhesive Primer for Plastic	550
Ceramic Tile Adhesives	65	Contact Adhesive	80
VCT & Asphalt Adhesives	50	Special Purpose Contact Adhesive	250
Drywall & Panel Adhesives	50	Structural Wood Member Adhesive	140
Cove Base Adhesives	50	Sheet Applied Rubber Lining Operations	850
Multipurpose Construction Adhesives	70	Top & Trim Adhesive	250
Structural Glazing Adhesives	100		
Substrate Specific Applications	**VOC Limit [g/L less water]**	**Sealants**	**VOC Limit [g/L less water]**
Metal to Metal	30	Architectural	250
Plastic Foams	50	Nonmembrane Roof	300
Porous Material (except wood)	50	Roadway	250
Wood	30	Single-Ply Roof Membrane	450
Fiberglass	80		420
Sealant Primers	**VOC Limit [g/L less water]**	**Aerosol Adhesives**	**VOC Weight [g/L minus water]**
Architectural Non Porous	250	General purpose mist spray	65% VOCs by weight
Architectural Porous	775	General purpose web spray	55% VOCs by weight
Other	750	Special purpose aerosol adhesives (all types)	70% VOCs by weight

[3] The source for the VOC limits for non-aerosol adhesives is the South Coast Air Quality Management District (SCAQMD) Rule 1168. For aerosol adhesives, the source is the Green Seal Standard for Commercial Adhesives, GS-36. For paints, source is Green Seal Standard GS-11 (and GS-03 for Anti-corrosive paints). For Finishes, sealers, shellacs, and stains, source is SCAQMD Rule 113.

Paints	VOC Limit (g/L)	Clear Wood FInishes	VOC Limit (g/L)
Flat	50	Varnish	350
Non-Flat	150	Lacquer	550
Anti-corrosive / anti-rust	250		
Sealers	**VOC Limit (g/L)**	**Shellacs**	**VOC Limit (g/L)**
Waterproofing sealers	250	Clear	730
Sanding sealers	275	Pigmented	550
All other sealers	200		
Stains	**VOC Limit (g/L)**		
All stains	250		

6.6 Furniture and Composite Wood

General office furniture contributes to a significant percentage of waste going to landfills. Consider reusing as much office furniture as possible which saves money and the environment (see the Waste Management section of this guide for more details). Cost effective, green, and healthy (no or low VOCs) products are readily available and some manufactures agree to take back products for reuse or recycling at the end of your use.

Wherever composite wood and agriculture fiberboards are specified (including in casework, millwork, and finished panels), ensure they contain no added urea-formaldehyde resins, which is a known carcinogen.

REQUIRED

Workstations can also have a significant environmental impact, particularly if they are not designed for easy assembly and reassembly, and capable for reuse or recycling. Improvements to indoor environment quality can be attained through the use of products that contain no or low VOCs. Consider specifying furniture which is Greenguard Indoor Air Quality Certified, which ensures it meets strict requirements relating to product off-gassing of harmful chemicals.

RECOMMENDED

6.7 Office Layout / Daylighting and Views

Research indicates a link between open plan work environments and improved organizational learning and productivity. By reducing the amount of walls or offices and moving towards an "open work" plan, you can reduce up front costs while increasing employee morale and wellbeing.

Consider locating open work spaces and offices around the perimeter of the tenant space, providing the majority of employees with access to windows, and locating non-regularly-occupied areas (such as conference rooms, employee kitchens, and break rooms) in the interior of the floor plate. Other strategies to consider include:

- lower partition heights,
- interior glazing, and
- high ceiling reflectance values.

RECOMMENDED

Provide shading and/or glare control devices such as operable blinds to ensure daylight effectiveness and control glare.

6.8 Recycling & Organics Bins:

Provide recycling and organics bins wherever waste is most likely to be generated and wherever waste bins are provided. The following waste streams should be collected separately, unless the building's waste management firm allows for comingled waste which is sorted off-site. Coordinate with property management to determine what level of sorting they require.

REQUIRED

Kitchens/Kitchenettes/Serveries	Photocopy Areas	Meeting/Boardrooms
- Organics	- Paper	- Paper
- Cans and Bottles	- Toner Cartridges	- Cans and Bottles
- Paper	- Battery Recycling	
-Plastics and Styrofoam		
- Waste		

Each receptacle should be properly labeled according to the building's identified waste streams. Conduct ongoing employee education (e.g. signage, information sessions, waste audits) on proper waste separation and recycling.

6.9 Minimize Pollutant Sources

It is important to minimize the pollutants that enter the building, and to appropriately manage those that are created within. Consider implementing the following control measures:

RECOMMENDED

- If the tenant space has entrances leading to the exterior, install walk-off grilles or grates to prevent dirt and particulates from entering the building.
- Where hazardous gases or chemicals may be present or used (including janitorial, copying, and printing rooms), provide segregated areas with self-closing doors and deck-to-deck partitions. Also provide separate outside exhausting at a rate of at least 9.2 m^3 / hour per m^2 (0.5 ft3 / minute per ft^2), with no air recirculation, maintaining a negative pressure compared with the surrounding spaces. (This consideration may add costs to the project.)
- Consider providing regularly occupied areas of the tenant space with new MERV 13 or better air filtration media prior to occupancy.

6.10 Bicycle Storage & Change Rooms

To encourage employees to run or cycle, consider incorporating secure bike storage and showers/ changing rooms into your space. Many racks and hanger systems are available for efficient bicycle storage. In shower rooms, consider supplying lockers as well.

RECOMMENDED

A suggested guideline is to provide secure bicycle storage for 5% of employees, and to provide showers for 0.5% of employees.

7. DURING CONSTRUCTION OR RENOVATIONS

REQUIRED	**Waste**	Divert at least 50% of waste from disposal in landfills
	IAQ	Implement an IAQ construction plan
RECOMMENDED	**Waste**	Divert at least 75% of waste from disposal in landfills
	Reuse	Reuse 40-60% of floors, walls, ceilings
		Reuse 5-10% of materials (not including furniture)
		Reuse 30% of furniture
	IAQ	Develop IAQ pre-occupancy plan (flush-out or testing)

7.1 Waste Management

REQUIRED

Divert at least 50% of demolition and construction waste from disposal in landfills.

Your contractor should be advised to contact local salvaging/recycling companies and arrange for recycling services. At a minimum, you should ensure your contractor recycles the following waste materials that could not be reused and may be generated throughout demolition and construction:

- Concrete / masonry / stone	- Plastic
- Steel and other metals	- Blue Box Waste
- Wood	- Glass
- Gypsum	- Ceiling Tiles
- Cardboard	- Carpet

An important element of the commitment to waste management is ensuring effective documentation is kept during the construction process. This is done through a Waste Diversion Report. The report is comprised of a compilation of waybills, invoices, letters and other documentation from your suppliers/contractors that is appropriately indexed and shows quantities and details (such as material type, load ID number and date) of waste diverted from and sent to landfill. A copy of your Waste Diversion Report should be provided to Bentall Kennedy when completed.

It is therefore essential that you inform your contractor early in the renovation process about the following processes and procedures that form part of an effective construction waste management plan. Note that the following points are not required, but are recommended to help ensure that the 50% diversion requirement is met.

- Designate a central Waste Collection Area onsite that is dedicated to the separation and storage of all waste generated during demolition and construction.
- Provide separate containers in the Waste Collection Area that are sized to accommodate the estimate amount of each waste type and quantity.
- Clearly indicate the material type being stored in each container using appropriate signage and labels.
- If space is insufficient to provide proper sorting, ship all materials to a sorting station.
- Co-ordinate daily inspections of containers to check for and remedy cross contaminations.
- Ensure the material type is clearly labeled on each container.
- Arrange for and/or promptly transport containers to receiving facilities when containers are full.

- Obtain weighbills showing the quantity of each material type leaving site (both diverted and non-diverted).
- Describe where materials to be diverted from landfill will be sent, and what their final end-use will be.
- Provide "blue box" recycling bins on site for recycling waste generated by site workers and visitors.
- Have suppliers and contractors provide a letter listing the item(s) to be reused and the item(s) and quantity being removed from the site.
- Those items being removed from the site should show a list of proposed salvaging / recycling facilities to be used and further specify the material(s) that will be accepted by each facility and whether the material(s) will be reused, recycled or sent to landfill.
- Follow any salvaging / recycling facilities' material acceptance requirements to ensure materials are properly sorted, grouped and packaged for collection.

If the above practices are undertaken, significantly more waste should be diverted than 50%. Consider asking your contractor to meet the stretch recommended goal of 75% diversion.

RECOMMENDED

7.2 Materials Reuse

If your renovation is due to a relocation, be sure to walk through your new premises and give careful consideration to any existing fixtures and furniture that can be reused. Also look to reuse whatever materials, equipment and resources you can from your existing premises.

Reasonable targets are to maintain 40% or even 60% by area of existing floors, walls, and ceilings. If materials are being taken from one site to another, or are being salvaged from a site which is being completely deconstructed, but will be reused in the rebuilt space, a reasonable target would be to reuse 5% or 10% of all materials by cost (not including furniture). Applicable salvaged materials include wall paneling, cabinetry, ceiling tiles, flooring, door hardware, and built-in furniture, but does not include movable partitions, furniture or other transient items. When furniture can be reused, a good target is to use 30% of the total furniture budget on reused items (based on their new, replacement value). If this is followed, you effectively save 30% of your furniture budget.

RECOMMENDED

7.3 Indoor Environment

Prevent indoor air quality problems arising from the construction / renovation process.

Ensure that the contractor develops and implements an IAQ construction plan that includes the following requirements:

- Follow the 2007 Sheet Metal and Air Conditioning Contractors National Association (SMACNA) IAQ Guidelines for Occupied Buildings under Construction (www.smacna.org).
- Protect all materials from moisture damage whether stored on-site or installed with the use of absorptive materials.
- Provide filtration media with a Minimum Efficiency Reporting Value (MERV) of 8 at each return air grill when air handlers are used during construction. Air handling systems serving the premises will only be turned on in the construction area when filters have been installed, and all filters will be replaced prior to occupancy.

REQUIRED

Many construction materials off-gas after installation. Post-construction cleaning of tenant spaces can also be harmful, especially if solvents are used. One way to mitigate these IAQ risks is to develop an IAQ Pre-Occupancy Plan and implement it after installation of all finishes, furniture and fixtures; after completion of building cleaning; and before occupancy. The plan should include one of the following two measures:

RECOMMENDED

- Install new filtration media and flush out the building by supplying 4,300 m^3 of outdoor air per m^2 of floor area (14,000 ft^3 of air per ft^2 of space), while maintaining a temperature of at least 16°C (60°F) and relative humidity no higher than 60%.
- Through air testing (conducted in accordance with testing protocols of the EPA Compendium of Methods for the Determination of Air Pollutants in Indoor Air), air contaminants should not exceed the specified amounts in the table below.

Contaminate	Maximum Concentration
Formaldehyde	27 parts per million
Particulates (PM10)	50 micrograms per cu. Meter
Total Volatile Organic Compounds (TVOC)	500 micrograms per cu. Meter
4-Phenylcyclohexene (4-PHC)	6.5 micrograms per cu. Meter
Carbon Monoxide	9 ppm and no greater than 2 ppm above outdoor levels

Additionally, reduce the quantity of indoor air contaminants that are odorous, potentially irritating and/or harmful to the comfort and well being of installers and occupants. This would include adhesives, sealants and sealant primers. Specify low volatile organic compound (VOC) materials in all products being used. This is often accomplished with no additional cost.

Special consideration should be given to the selection of furniture and fixtures to ensure VOC levels are minimized and sufficient time for "off gassing" of new furniture is allowed to occur in a warehouse designed for this purpose rather than on the construction site. Be sure to order these products early in your process so it does not delay your overall construction schedule.

8. INFORMATION AND RESOURCES

To assist you in your pursuit of a green office, we have identified a few of the thousands of web sites and resources available online.

General Resources:

- eBUILDSMART®: A program of Metro Vancouver, is a sustainable building information source for the design and construction industry, helping make smart, sustainable choices when crafting the future of our constructed environment. The site features a sustainable products directory, technical resources, and information covering the life cycle of a building including; Design, Construction, Operations, Retrofit/Renovation and finally Deconstruction. www.gvrd.bc.ca/BuildSmart/

Water Fixture Resources:

Look for the EPA WaterSense label on products, and visit the WaterSense Web site to find products and rebates: www.epa.gov/watersense/

- American Standard: http://www.americanstandard-us.com/water-efficiency/
- Delta: www.deltafaucet.ca
- Grohe: www.grohewatercare.com/bath.htm
- Kohler Triton Faucet; Kohler Steward Waterless Urinal: http://www.savewateramerica.com/index.htm
- Moen Envi Showerhead: http://www.moen.com/eco-performance
- NEOPERL: www.neoperl.com
- Niagara: www.niagaraconservation.com/Aerators.html and www.niagaraconservation.com/Showerheads.html
- Sloan: www.waterefficiency.com/products.html
- Toto: http://www.totousa.com/Green/Totology.aspx
- Zurn: http://www.zurn.com/Pages/SustainabilityNew.aspx

Lighting Fixture Resources:

Look for the ENERGY STAR label on bulbs and fixtures.
Search for efficient lighting solutions at www.energystar.gov/lighting

Lighting Controls Resources:

- Douglas Lighting Control: www.douglaslightingcontrol.com
- Hubbell Lighting: http://www.hubbelllighting.com/resources/greenwise/Control.php
- Leviton: www.leviton.com/OA_HTML/ibeCCtpSctDspRte.jsp?section=15550&minisite=10025
- Lutron: http://lutron.com/products
- Sensor Switch: www.sensorswitch.com/OnlineCatalog.aspx
- Wattstopper: www.wattstopper.com

Green Power Resource:

For a listing of green power sources, see: www.green-e.org/energy

- Bullfrog Power: Bullfrog sources power exclusively from generators who meet or exceed the federal governments Environmental Choice Program EcoLogo™ standard for renewable electricity. http://bullfrogpower.com
- Renewable Choice Energy: Offers a range of green energy sources including 100% Canadian sourced and typically lower cost American sourced options. www.renewablechoice.com
- 3Degrees: Another reputable company which provides a variety of green energy sources from various sources and at various price points. www.3degreesinc.com/

Recycled Content, Regional Materials, and Rapidly Renewable Materials Resources:

- BuildingGreen.com: www.buildinggreen.com/menus/leedList.cfm
- EPA Environmentally Preferable Purchasing: www.epa.gov/opptintr/epp/
- Good to Be Green: www.goodtobegreen.com
- Green Building Pages: www.greenbuildingpages.com/manufacturers/ProductSearch.php
- Greener Building: www.armstrong.com/resram/na/linoleum/en/us
- Columbia Bamboo Plywood: www.columbiaforestproducts.com
- Eco-Friendly Flooring: www.ecofriendlyflooring.com
- Ecofinishes: www.ecoflnishes.com
- EnvironBiocomposites engineered panel products: www.environbiocomposites.com
- Expanko Cork Flooring: www.expanko.com
- Forbo Flooring Systems linoleum products: www.forbo-flooring.com
- Globus Cork: www.corkfloor.com
- GreenSage bamboo products: www.greensage.com
- Kirei bamboo and wheatboard products: www.kireiusa.com
- Plyboo bamboo products: www.plyboo.com
- Sustainable Flooring bamboo and cork products: www.sustainableflooring.com

Certified Wood Resources:

- DuroDesign FSC flooring: www.duro-design.com
- Eco-Friendly Flooring: www.ecofriendlyflooring.com/woods.html
- Knoll FSC Modular Office Furniture: www.knoll.com
- Neil Kelly FSC Cabinets: www.neilkellycabinets.com
- Sustainable Flooring: www.sustainableflooring.com/index.php?index=certifled

Low VOC Material Resources:

- AFM SafeCoat: www.afmsafecoat.com
- Benjamin Moore: http://www.benjaminmoore.com/en-us/for-architects-and-designers/green-promise-environmentally-friendly-paint
- Find a certified paint through Green Seal: www.greenseal.org/findaproduct/paints_coatings.cfm
- Sherwin Williams: www.sherwin-williams.com/pro/sherwin_williams_paint/product_specifications/leed/index.jsp
- Carpet and Rug Institute ("CRI") Green Label Plus program: www.carpet-rug.org/commercial-customers/green-building-and-the-environment/green-label-plus/index.cfm
- CRI Green Label program: www.carpet-rug.org/commercial-customers/green-building-and-the-environment/green-label-plus/cushion.cfm
- FloorScore: www.rfci.com/int_FS-ProdCert.htm
- InterfaceFLOR: www.interfaceflor.com
- LG Floors: www.lgfloors-usa.com
- Mannington Commercial: www.manningtoncommercial.com
- Crystal Cabinets: www.crystalcabinets.com/GreenProducts.htm
- Harring Doors: www.harringdoors.com/leed.html

Waste Management Resources:

- Halton Region - www.halton.ca/living_in_halton/recycling_waste
- City of Toronto - www.toronto.ca/garbage/index.htm
- Web Based - Buy and Sell of Recycling materials - www.recycle.net/
- California Integrated Waste Management Board C&D Recycling Toolkit for Contractors: www.ciwmb.ca.gov/ConDemo/Toolkit/default.htm

- Construction Materials Recycling Association database of recyclers: www.cdrecycling.orgfind.html and Master Specifications for C&D recycling: www.ciwmb.ca.gov/ConDemo/Specs/CMRA.htm
- Recycling C&D Wastes: A Guide for Architects and Contractors: www.mass.gov/dep/recycle/reduce/cdrguide.pdf
- Seattle/King County Contractors' Guide for job-site recycling and waste prevention: www.recyclecddebris.com/rCDd/Resources/Documents/CSRContractorsGuide.pdf
- Whole Building Design Guide database of recyclers: www.wbdg.org/tools/cwm.php and CWM resource page: www.wbdg.org/resources/cwmgmt.php

9. TAKING IT TO THE NEXT LEVEL

If your organization wishes to further demonstrate its commitment to sustainable office interiors, consider certification of your interior renovations to the LEED® Canada for Commercial Interiors (LEED CI) rating system offered by the Canada Green Building Council (CaGBC).

A LEED certified space has numerous benefits. Studies[4] have shown that LEED spaces have on average:

- 25% less energy use
- 19% lower operating costs
- 27% higher occupant satisfaction

A number of the requirements of LEED CI are incorporated into the required sections of this guide, and many of the recommended stretch targets align with LEED CI credits. Depending on the number of recommended measures implemented, only minimal additional effort may be required to plan your renovation to be LEED compliant. Below is a summary of how the required and recommended targets compare to LEED-CI prerequisites and credits.

Detailed information available at http://www.cagbc.org/.

Of paramount importance is to ensure your consultants are LEED Accredited Professionals (LEED APs) with experience in LEED accreditation programs to alleviate costs that can be associated with their learning curve.

[4] GSA Public Buildings Service, 2011. Green Building Performance, A Post Occupancy Evaluation of 22 GSA Buildings. www.gsa.gov.graphics/pbs/Green_Building_Performance.pdf

Topic	Bentall Kennedy Tenant Green Design Guide			Related LEED Canada CI credit or prereq
Water Efficiency	REQUIRED	Water	Low flow water fixtures	WEc1.1
	RECOMMENDED	Water	Lower flow water fixtures	WEc1.2
Energy Efficiency	REQUIRED	Lighting	New lighting must be no more than 10.06 W/m2 (0.935 W/ft2)	EAc1.1 (1 point)
			One lighting control strategy using occupancy or daylight sensors	EAc1.2
		Energy	HVAC and lighting to comply with ASHRAE Standard 90.1-2007	EAp2
		Refrigerants	No new CFCs; existing CFCs must have phase-out plan	EAp3
		Equipment	Install only Energy Star rated equipment and appliances	EAc1.4
	RECOMMENDED	Lighting	Provide lighting controls (desk lamps) to 90% of occupants	EQc6.1
			New lighting to be more efficient than the above requirement	EAc1.1 (points 2-3)
		Refrigerants	No new equipment to use HFCFs	
		Measurement	Install metering to measure and record utility consumption	EAc3
		Commissioning	Engage a commissioning authority	EAp1 / EAc2
		Green Power	Offset 50% of annual electricity with offsite green power purchase	EAc4
Healthy & Environmentally Friendly Interiors	REQUIRED	New Materials	Recycled content (post + ½ pre) is at least 10%	MRc4.1
			CRI Green Label+ Carpet and FloorScore hard flooring	EQc4.3
		Recycling	Recycling and organics bins wherever waste bins are provided	MRp1
		Paints	Use low VOC paints, sealants, coatings, and adhesives	EQc4.1-4.2
		Composites	Composite wood must not contain added urea-formaldehyde	EQc4.4
		Indoor Air	Air quantities as per Sections 4 through 7 of ASHRAE 62.1-2007	EQp1
		Comfort	HVAC designed to meet ASHRAE 55-2004	EQc7.1
	RECOMMENDED	New Materials	Recycled content (post + ½ pre) is at least 20%	MRc4.2
			10% extracted and 20% manufactured regionally	MRc5
			50% of wood based materials to be from FSC wood	MRc7
			5% of materials to be rapidly renewable	MRc6
		Layout	Locate open work spaces and offices around perimeter	EQc8
		Furniture	Specify Greenguard Certified furniture	EQc4.5
		Comfort	Provide thermal controls to 50% of occupants	EQc6.2
		Pollutants	Specialty ventilation, entrance mats, high efficiency filters	EQc5
		Cycling	Secure bike storage for 5% of employees, showers for 0.5%	SSc3.2
During Construction or Renovation	REQUIRED	Waste	Divert at least 50% of waste from disposal in landfills	MRc2.1
		IAQ	Implement an IAQ construction plan	EQc3.1
	RECOMMENDED	Waste	Divert at least 75% of waste from disposal in landfills	MRc2.2
		Reuse	Reuse 40-60% of floors, walls, ceilings	MRc1.2 & 1.3
			Reuse 5-10% of materials (not including furniture)	MRc3.1 & 3.2
			Reuse 30% of furniture	MRc3.3
		IAQ	Develop IAQ pre-occupancy plan (flush-out or testing)	EQc3.2

SCHEDULE 1: LEED-CI SUMMARY

What is LEED?

The Leadership in Energy and Environmental Design (LEED) Green Building Rating System™ is a voluntary, consensus-based national rating system that encourages and accelerates global adoption of sustainable green building and development practices through the creation and implementation of universally understood and accepted tools and performance criteria.

LEED Basic Facts

- LEED is implemented by the Canadian Green Building Council for the Canadian market and by the U.S. Green Building Council for the United States market which are not for profit and non profit organizations respectively
- LEED is a point-based system for rating the environmental performance of buildings
- Ratings of CERTIFIED, SILVER, GOLD or PLATINUM are awarded based on the number of points a project achieves
- LEED includes a third-party review and certification process
- There are several versions of LEED, each addressing different building types and construction scopes

LEED –CI

LEED for Commercial Interiors is the green benchmark appropriate for the tenant improvement market. It is the recognized system for certifying high-performance green interiors that: are healthy, productive places to work; are less costly to operate and maintain; and have a reduced environmental footprint. LEED–CI provides a framework to make sustainable choices to tenants and designers who do not occupy whole buildings.

LEED–CI addresses the following categories of environmental performance, which are explained in more detail in the sections that follow:

- Sustainable Sites
- Water Efficiency
- Energy & Atmosphere
- Materials & Resources
- Indoor Environmental Quality
- Innovation in Design

Sustainable Sites

This section looks at the environmental choices in terms of the site, its surroundings and certain aspects of the base building in which the LEED–CI project is taking place. A number of the issues addressed in this section may be outside of the scope of influence of the tenant. Within Sustainable Sites, LEED–CI addresses environmental performance in areas such as the reuse of brownfield sites, stormwater management, heat island effect, on-site renewable energy and transportation management.

Water Efficiency

Points for water efficiency are awarded to project teams for their reduction in potable water use relative to standard practice. Low flow fixtures such as toilets, showers and faucets all contribute towards these points.

Energy & Atmosphere

Energy conservation may be the most important way to reduce the negative environmental impact of buildings, since energy use is implicated in resource depletion, global warming and air pollution to name but a few impacts.

To reflect the importance of this section, it contains three prerequisites – mandatory measures that must be completed in order to obtain any level of LEED certification. These are:

- Fundamental Commissioning – to ensure that testing procedures are conducted before tenant occupancy
- Minimum Energy Performance – to ensure compliance with energy code standards
- CFC Reduction – to ensure the avoidance of ozone depleting CFCs in mechanical equipment

LEED rewards projects with points for meeting or exceeding energy efficiency standards for lighting, HVAC and appliances. Points are also available for electricity from green sources, energy metering and enhanced commissioning.

Materials and Resources

The energy and resources required to extract, manufacture and transport building materials have significant environmental impacts. To reduce these impacts, the design team should emphasize the use of materials that have a minimal environmental impact and low embodied energy.

This section has one prerequisite – the provision of space for storing recyclables in the finished project – and also assesses the recycled content, reused content and locality of the materials used. Points are also available for diverting construction waste from landfill and selecting sustainable materials such as FSC certified wood or rapidly renewable materials such as bamboo.

Indoor Environmental Quality

Earth-conscious building design doesn't stop at the building entrance, but includes issues related to the indoor environment: air quality, natural lighting and outdoor views. Healthy workspaces mean healthy, happy and productive staff with reduced absenteeism; many measures in this section make commercial sense too.

All projects must comply with two prerequisites in this section – tobacco smoke control and ventilation rates in accordance with or better than minimum standards.

Beyond that, LEED encourages a healthy working environment in two ways. First, LEED awards project points for minimizing harmful substances such as pollutants from construction process and harmful substances (particularly VOCs) in materials, paints, sealants and furniture. Second, LEED recognizes design features that actively contribute toward health and well being, namely natural day lighting, views out and comfortable and controllable heating, ventilation and lighting systems.

Innovation in Design

The final section allows projects to be rewarded for innovation measures not covered elsewhere in LEED or to achieve points by demonstrating "exceptional performance" in one of the areas covered by LEED.

BentallGreenOak

APPENDIX B

150 KING STREET WEST
CONTRACTOR AUTHORIZATION

I hereby acknowledge that I have read, understood and will comply with the following terms and conditions.

1. All contractors and suppliers must abide by the rules and regulations set by the Property Management Office.

2. Contractors and suppliers will act in accordance with the Occupational Health & Safety Act and all Municipal & Provincial Codes and Regulations.

3. Work Permits must be completed and approved by the Property Management Office.

4. All contractors will sign in and out of the security desk located in the lobby. The contractor must indicate the name of the company they are working with and the location of the work.

5. Contractor badges will be issued upon sign in and must be worn in plain view at all times while on site.

6. Contractor badges must be returned to security when leaving the 150 King West and at the end of each business day.

7. Any lost or misplaced badges must be reported to security immediately.

8. Any individuals in violation of the rules and regulations may be subject to immediate and permanent dismissal from the site.

We thank you for your cooperation as we continue to provide a safe environment for our tenants.

150 King Street West

№ 15468

APPENDIX C

RSA

HOT WORK PERMIT

CAN THIS HOT WORK JOB BE AVOIDED E.G., USING BOLTING, SCREWS, THREADED PIPE OR NON-SPARK PRODUCING SAWS INSTEAD OF WELDING OR BLOW TORCHING?

Company policy requires this Permit to be used if a safer attachment method cannot be found for any of the following operations, including but not limited to: Brazing, Cutting (Blow torch or spark producing saws), Grinding, Soldering, Torch Applied Roofing & Welding and Thawing Pipe.

PRECAUTIONS

- ☐ Cutting/Welding equipment in good repair.
- ☐ At least 2 Employees/Contractors are present during Hot Work activity.
- ☐ Appropriate Management/Health & Safety personnel have been made aware of activity.
- ☐ Available sprinklers, hose streams and extinguishers are in service/operable.

Requirements within 35 ft (11m) of work

- ☐ Floors swept clean.
- ☐ Remove all combustibles where possible. Otherwise protect with fire-resistive tarpaulins or metal shields.
- ☐ Flammable liquids, dust, lint and oily deposits removed, including from building structure.
- ☐ Combustible floors wet down, covered with damp sand or fire-resistive sheets.
- ☐ All wall and floor openings covered.
- ☐ Fire-resistive tarpaulins suspended beneath work.
- ☐ Protect/Shutdown ducts and conveyors.
- ☐ Explosive atmosphere in area eliminated.

DO NOT CONDUCT HOT WORK IF SPRINKLERS OUT OF SERVICE

Hot Work on walls or ceilings

- ☐ Noncombustible construction; no combustible covering or insulation.
- ☐ Combustibles on other side of walls moved away.

NOTE: No work allowed on foam insulated or plastic panels.

Hot Work on enclosed equipment

(eg. pressure vessels, tanks, piping)

- ☐ Containers/Enclosed equipment cleaned/purged of all combustibles/flammable liquids/vapors.
- ☐ Confined space assessment made.

Fire watch/Hot Work monitoring

- ☐ Fire watch is supplied with suitable extinguishers, charged small hose.
- ☐ Fire watch is trained in use of this equipment and in sounding alarm.
- ☐ Fire watch will be provided during and for 30 minutes after work, including any coffee or lunch breaks.
- ☐ Fire watch may be required for adjoining areas, above and below.
- ☐ Monitor Hot Work area for 3 hours after job is completed.

Other Precautions Taken:

☐ _____

_____

PROCEDURES

Before issuing this Permit, the fire safety supervisor/ appointee shall inspect the work area and confirm that precautions have been taken in accordance with NFPA No. 51B and this permit.

Firesafety Supervisor:

A. Verify precautions listed above (or do not proceed with the work).
B. Complete and retain PAGE 1.
C. Issue PAGE 2 to person doing job.

HOT WORK BEING DONE BY (NAME & COMPANY):

DATE:

WORK NO.:

LOCATION (BUILDING & FLOOR):

REASON FOR WORK:

The above location has been examined, the precautions checked on the Required Precautions Checklist have been taken to prevent fire, and permission is authorized for this work by:

FIRESAFETY SUPERVISOR (PRINT & SIGN):

TIME STARTED: AM PM

INSERT FIRE DEPARTMENT PHONE # ON BACK OF FORM

PERMIT EXPIRES:	DATE	TIME	AM PM

Attach this portion on office peg board while Hot Work is being done.

RSA

WATCH FOR FIRE!

HOT WORK IN PROGRESS

EMERGENCY: FIRE DEPARTMENT PHONE #

CALL: _____

WATCH FOR FIRE!

APPENDIX D

SUPPLEMENTARY CONDITIONS

GENERAL REFERENCE

The Canadian Standard Construction Document, CCDC2-2008, Stipulated Price Contract, consisting of the Agreement between Owner and Contractor, Definitions and the General Conditions of the Stipulated Price Contract, and these Supplementary Conditions, are part of the Contract Documents.

The following Supplementary Conditions shall be read in conjunction with the Canadian Standard Construction Document, CCDC2-2008.

The form of Agreement between Owner and Contractor to be signed is the pre-printed Canadian Standard Construction Document, CCDC2-2008, Stipulated Price Contract.

Section and paragraph references below are to the corresponding sections and paragraphs of the Agreement between Owner and Contractor, Definitions and General Conditions of the Canadian Standard Construction Document, CCDC2-2008, Stipulated Price Contract.

AGREEMENT

A-1 The Work

1.3 ADD the words "and attain Completion of the Work as soon as reasonably possible thereafter and in any event by the date which is 30 days following Substantial Performance of the Work" at the end of paragraph 1.3.

A-4 Contract Price

4.6 ADD new paragraph 4.6 as follows:

"4.6 The Contractor agrees that, notwithstanding GC 6.1 - CHANGES, GC 6.2 -CHANGE ORDER and GC 6.3- CHANGE DIRECTIVE of this Agreement, the Contract Price will not be adjusted for any changes in the Work made pursuant to GC 6.1 - CHANGES, GC 6.2 - CHANGE ORDER or GC 6.3 - CHANGE DIRECTIVE of this Agreement, whether by Change Order or Change Directive, unless any such change results in a material change in the Work as contemplated in the Contract Documents as of the date of execution of this Contract such that the Contract Time will be materially extended or there will be a material increase in the Contractor's forces engaged on the Work. The parties agree that only the Owner shall have the right to approve changes in the Work."

4.7 ADD new paragraph 4.7 as follows:

"4.7 The parties agree that the Contract Price shall be the complete price for the Work and includes the co-ordination of all documentation with the Consultant and all contingency amounts that the Contractor believes are necessary to complete the Work in accordance with the Contract Documents."

A-6 Receipt of and Addresses for Notices

6.1 ADD the words "prior to 4:00 p.m. on a Working Day and otherwise on the next following Working Day" after the words "hand or courier" in the fifth line of paragraph 6.1.

DELETE the words "after the end of normal business hours on the date of its transmission at the place of receipt" in the ninth line of paragraph 6.1 and REPLACE them with the words "after 4:00 p.m. on a Working Day".

DEFINITIONS

6. Contract Documents: ADD at the end of the sentence the words "in writing".

16. Provide: DELETE definition 16 in its entirety and REPLACE it with the following:

"**16. Provide**

Provide, when used in conjunction with Product, means to supply, install and put into service."

20. Substantial Performance of the Work: DELETE definition 20 in its entirety and REPLACE it with the following:

"**20. Substantial Performance of the Work**

Substantial Performance of the Work means when all of the following have occurred:

(a) the Consultant has certified that:

(i) the Contract is substantially performed within the meaning of subsection 2(1) of the *Construction Lien Act* (Ontario) (or the equivalent section of the lien legislation applicable to the Place of the Work); or

(ii) if any such legislation is not in force or does not contain such definition, the Work is ready for use or is being used for the purposes intended and is capable of completion or, where there is a known defect, correction, at a cost of not more than, (A) 3 per cent of the first $500,000 of the Contract Price, (B) 2 per cent of the next $500,000 of the Contract Price, and (C) 1 per cent of the balance of the Contract Price; and

(b) all Work which has been completed has been performed to the requirements of the Contract Documents, including, without limitation, substantially in accordance with all drawings and specifications therefor and is so certified by the Consultant; and

(c) the Contractor has obtained and delivered to the Consultant and the Owner clear inspection reports from all authorities having jurisdiction with respect to any component of the Work which has been completed; and

(d) the Consultant has inspected and tested or caused to be tested the Work and certified to the Owner that all mechanical, electrical, plumbing, heating, ventilating, air-conditioning, security, life and safety, elevator and other building operating systems are in proper working order in accordance with the Contract Documents. Without limiting the generality of the foregoing, all applicable building systems shall have been air and fluid balanced and the Consultant shall have received, reviewed and confirmed its acceptance of reports with respect to such balancing; and

(e) all turnover stock, materials and equipment is located at the Place of the Work and has been inspected by the Consultant and the Consultant has confirmed its acceptance of the same by

written notice to the Owner and the Contractor and such turnover stock, materials and equipment shall have been effectively delivered to the Owner by the Contractor; and

(f) the Contractor shall have provided to the Owner and the Consultant emergency contact information for the Contractor and each Supplier and Subcontractor which will allow the Owner to contact and obtain assistance from any of such persons on a 24-hour basis in the event of any emergency at the Project; and

(g) the Contractor shall have provided to the Owner and the Consultant a summary of all guarantees and warranties received or to be received by the Contractor from any Subcontractors and Suppliers and copies of such warranties and guarantees to the extent received; and

(h) the Contractor shall have prepared and delivered to the Consultant and the Owner a "punch list" of all items of the Work which are incomplete, outstanding, deficient or defective and remain to be completed or rectified with projected completion dates for each item specified and such list shall be acceptable to the Owner and the Consultant; and

(i) the Consultant shall have reviewed the "punch list" and shall have provided its report to the Owner and the Contractor as to the cost to complete the outstanding items specified therein."

27. Actual Subcontract Costs: ADD the following as new definition 27:

"**27. Actual Subcontract Costs**

Actual Subcontract Costs means in respect of each Subcontract between the Contractor and a Subcontractor or a Supplier the actual subcontract price or supply price set forth therein or calculated thereunder."

28. Commencement of the Work: ADD the following as new definition 28:

"**28. Commencement of the Work**

Commencement of the Work or commencing the Work means the commencement of the erection of hoarding at the Place of the Work or the mobilization of or entering into of the Place of the Work by the Contractor's forces."

29. Completion: ADD the following as new definition 29:

"**29. Completion**

Completion means when all of the following have occurred:

(a) Substantial Performance of the Work has been achieved; and

(b) the entire Work has been performed to the requirements of the Contract Documents and is so certified by the Consultant; and

(c) the Contractor shall have provided to the Owner and the Consultant a summary of all guarantees and warranties to be provided by all Subcontractors and Suppliers and copies of all such warranties and guarantees; and

(d) the Consultant has certified that:

(i) the Contract is deemed to have been completed within the meaning of subsection 2(3) of the *Construction Lien Act* (Ontario) (or the equivalent section of the lien legislation applicable to the Place of the Work); or

(ii) if any such legislation is not in force or does not contain such definition, the price of completion, correction of a known defect or last supply is not more than the lesser of 1 per cent of the contract price and $1,000.

30. Construction Budget: ADD the following as new definition 30:

"**30. Construction Budget**

Construction Budget means the construction budget included as one of the Contract Documents, as the same may be revised from time to time with the prior written approval of the Owner in its sole discretion."

31. Subcontract: ADD the following as new definition 31:

"**31. Subcontract**

Subcontract means all subcontracts and supply agreements in respect of the performance of any part of the Work or the supply of any Products or other labour or materials in connection with the Work which are entered into by the Contractor with a Subcontractor or Supplier in accordance with GC 3.8 - SUBCONTRACTORS AND SUPPLIERS."

32. Manager: ADD the following as new definition 32:

"**32. Manager**

Manager means Bentall Limited Partnership, by its general manager, Bentall G.P. Ltd and its successors and permitted assigns."

GENERAL CONDITIONS OF THE STIPULATED PRICE CONTRACT

GC 1.1 Contract Documents

1.1.7.1 DELETE paragraph 1.1.7.1 in its entirety and REPLACE it with the following:

".1 the order of priority of documents, from highest to lowest, shall be
- Supplementary Conditions,
- the Agreement between the Owner and the Contractor,
- the Definitions,
- the General Conditions,
- Division 1 of the Specifications,
- technical Specifications,
- material and finishing schedules,
- the Drawings."

1.1.11 ADD the following as new paragraph 1.1.11:

"1.1.11 If the Contractor finds errors, inconsistencies or discrepancies in, or omissions from the drawings, specifications, or other Contract Documents or has any doubt as to the meaning or intent of any part thereof, the Contractor shall at once notify the Consultant and the Owner and the Consultant, in consultation with the Owner, shall provide written instructions or explanations. Neither the Owner nor the Consultant shall be responsible for oral instructions."

GC 1.4 Assignment

1.4.1 ADD at the beginning of paragraph 1.4.1 the words "Subject to the provisions of paragraph 1.4.2 below,".

1.4.2 ADD as new paragraph 1.4.2 the following:

"1.4.2 Notwithstanding paragraph 1.4.1 above, the Owner shall have the right, without the written consent of, but on written notice to the Contractor, to assign the Contract or a portion thereof to a purchaser of all or a corresponding portion of the Project or the Place of the Work and, provided that the purchaser has executed an agreement in favour of the Contractor agreeing to assume, perform and be bound by all or a corresponding portion of the obligations and covenants to be performed by the Owner under the Contract, the Owner shall thereupon be released of any obligations or a corresponding portion thereof arising under the Contract from and after the date of such assignment to the extent of the interest so assigned by the Owner."

GC 2.2 Role of the Consultant

2.2.7 DELETE from paragraph 2.2.7 the words "Except with respect to GC 5.1 - FINANCING INFORMATION REQUIRED OF THE OWNER" in the first line.

2.2.16 ADD at the end of paragraph 2.2.16 the words "and the date of Completion of the Work as provided in GC 5.7."

GC 2.3 Review and Inspection of the Work

2.3.1 ADD the words "and the Owner" immediately following the words "the Consultant" appearing in the second sentence of paragraph 2.3.1.

2.3.2 ADD the words "and the Owner" immediately following the words "the Consultant" in the second line of paragraph 2.3.2.

2.3.3 ADD the words "and the Owner" immediately following the words "the Consultant" in paragraph 2.3.3.

GC 2.4 Defective Work

2.4.1 ADD the words "or the Owner" immediately following the words "the Consultant" in paragraph 2.4.1.

2.4.3 DELETE paragraph 2.4.3 in its entirety and REPLACE it with the following:

"2.4.3 If in the opinion of the Consultant it is not expedient to correct defective work or work not performed as provided in the Contract Documents, the Owner may deduct from the amount otherwise due to the Contractor the greater of (i) the difference in value between the work as performed and that

called for by the Contract Documents and (ii) the cost to rectify the defective or substandard work. If the Owner and the Contractor do not agree on the difference in value or the cost to rectify the work, they shall refer the matter to the Consultant for determination."

GC 3.2 Construction by Owner or Other Contractors

3.2.1 ADD the words "and to permit tenants of the Project to award" immediately following the words "to award" and ADD the words "and to permit tenants of the Project to perform" immediately following the words "to perform" in paragraph 3.2.1.

3.2.2 ADD the words "or a tenant's" immediately before the words "own forces" wherever it appears in paragraph 3.2.2.

3.2.2.2 DELETE paragraph 3.2.2.2 in its entirety.

3.2.2.4 DELETE paragraph 3.2.2.4 in its entirety and REPLACE it with the following:

".4 provide for the co-ordination of the insurance coverage with the insurance coverage of the Contractor as it affects the Work of this Contract; and".

3.2.3 ADD the words "or a tenant's" immediately before the words "own forces" wherever it appears in paragraph 3.2.3.

ADD the words ", tenants, their respective agents" immediately following the word "Owner" in subparagraphs 3.2.3.1 and 3.2.3.2.

ADD the following to paragraph 3.2.3:

".4 grant the Owner, tenants of the Project and their respective agents and other contractors the right to enter, use and occupy the Place of the Work, in whole or in part, and perform work before completion of the Contract, if in the opinion of the Consultant, such entry and occupation does not prevent or materially interfere with the Completion of the Work by the Contractor. Such entry and occupation shall not relieve the Contractor of the Contractor's responsibility to complete the Work in accordance with the provisions of the Contract Documents;

.5 observe the right of tenants and their agents, other contractors or other persons duly authorized by the Owner or Consultant to use the Place of the Work;

.6 maintain free and unencumbered access for the Owner, tenants and their respective agents as is reasonably practicable to service doors and other entrances at all times following occupancy of the Work, provided that the Owner, tenants and their respective agents shall comply with such reasonable rules and regulations, including safety and security precautions, as the Contractor may stipulate with respect to the Place of the Work, the particulars of which shall be provided to the Owner and the Consultant and to all persons on or about the Place of the Work; and

.7 continue to have overall responsibility for compliance with the applicable health and construction safety legislation at the Place of the Work, including discharging all of the duties and obligations of the 'constructor', 'prime contractor' or other comparable designation within the meaning of the applicable health and construction safety legislation."

3.2.4 ADD the words "or a tenant's" immediately before the words "own forces" in paragraph 3.2.4.

3.2.5. ADD the words “or a tenant’s” immediately before the words “own forces” in paragraph 3.2.5.

3.2.6 ADD the words “or a tenant of the Project” immediately following the word “Owner” in paragraph 3.2.6.

GC 3.4 Document Review

3.4.1 DELETE paragraph 3.4.1 in its entirety and REPLACE it with the following:

“3.4.1 The Contractor confirms that it has reviewed the Contract Documents and, to the best of its knowledge, information and belief, has found no errors, inconsistencies, discrepancies or omissions.”

GC 3.5 Construction Schedule

3.5.1.1 DELETE paragraph 3.5.1.1 in its entirety and REPLACE it with the following:

“3.5.1.1 The Contractor agrees to proceed with and complete the Work in accordance with the construction schedule forming part of the Contract Documents.”

GC 3.7 Subcontractors and Suppliers

3.7.2 DELETE paragraph 3.7.2 in its entirety and REPLACE it with the following:

“3.7.2 The Contractor shall deliver to the Owner and the Consultant prior to issuance copies of all requests for proposals, requests for tenders, requests for bids and other requests for competitive quotations to be made to Subcontractors or Suppliers in respect of any portion of the Work, together with a list of the proposed Subcontractors and Suppliers from whom tender proposals shall be requested for approval by the Owner and the Consultant of the scope of work contemplated in the tender packages and the identity of the proposed Subcontractors and Suppliers. The Owner and the Consultant shall not unreasonably withhold or delay such approvals. The Contractor shall not employ any Subcontractor or Supplier unless the identity of the Subcontractor or Supplier and the scope of work to be performed by such Subcontractor or Supplier have been approved in writing by each of the Owner and the Consultant.”

3.7.3 DELETE the words “before the Owner has signed the Contract” and REPLACE them with the words “before the Contractor has signed a Subcontract with any Subcontractor or Supplier”.

3.7.7 ADD the following as new paragraph 3.7.7:

“3.7.7 As general and continuing collateral security for the faithful performance by the Contractor of the Contract and the discharge of all of its obligations arising thereunder, the Contractor hereby assigns and transfers to the Owner, and grants to the Owner a security interest in, all of the Contractor’s right, title, estate and interest in and to all Subcontracts and all benefits, powers and advantages of the Contractor to be derived therefrom, and all covenants, obligations, undertakings and agreements of the Subcontractors and Suppliers thereunder (whether arising pursuant thereto or available to the Contractor at law or in equity) including, without limitation, but subject to the provisions of paragraph 3.7.8 below, the right of the Contractor to enforce the Subcontracts and the obligations of the Subcontractors and Suppliers thereunder and to give or withhold any and all consents, requests, directions, instructions, approvals, extensions or waivers thereunder in accordance with the terms thereof and to exercise options, make elections, declare defaults and participate in arbitration or other legal proceedings thereunder. To the extent that any Subcontract is not assignable

to the Owner at law (because the remedies for the enforcement thereof would not as a matter of law pass to the Owner as an incident of the assignment and transfer made pursuant to this paragraph 3.7.7 or because such Subcontract is held to be a non-assignable personal services contract), the Contractor shall hold its interest in such Subcontract in trust for the Owner and said interest and all benefits derived under such Subcontract shall be for the account of the Owner. Upon the Owner exercising its rights under the Subcontracts in accordance with paragraph 7.1.5.5, in order that the full benefit of every Subcontract not assigned to the Owner under this paragraph 3.7.7 but held for it in trust as aforesaid may be realized for the benefit of the Owner, the Contractor shall, at the request and expense and under the direction of the Owner, in the name of the Contractor, take all such action or do or cause to be done all such things as are necessary or desirable in order that the Contractor's rights under such Subcontracts may be preserved for the benefit of the Owner and that the obligations of the Subcontractor or Supplier under such Subcontracts may be enforced. The Owner and the Contractor agree that value has been given for the granting of the security interest contemplated in this paragraph 3.7.7 and that the parties have not agreed to postpone the time for attachment except for Subcontracts which are entered into after the date of this Contract, the attachment to which will occur forthwith upon the Contractor acquiring rights thereto or therein."

3.7.8 ADD the following as new paragraph 3.7.8:

"3.7.8 Although it is the intention of the Contractor and the Owner that paragraph 3.7.7 shall constitute a present and effective assignment and transfer of and security interest in the Subcontracts to and in favour of the Owner, it is expressly understood and agreed, notwithstanding anything contained in the Contract Documents to the contrary, that the Contractor shall remain solely responsible for the performance and observance of all of the covenants and agreements to be performed by the Contractor under the Subcontracts and for the enforcement of the covenants and obligations of the Subcontractors and Suppliers thereunder, and that unless the Owner exercises its rights under paragraph 7.1.5.5, the Contractor shall be entitled to exercise all of its rights, remedies, powers, benefits, privileges and claims under the Subcontracts (whether arising pursuant thereto or available to the Contractor at law or in equity), subject always to the terms and conditions of the Contract Documents. Until such time as the Owner exercises its rights under paragraph 7.1.5.5, nothing contained in this paragraph 3.7.8 or paragraph 3.7.7 shall render the Owner liable to the Subcontractors or Suppliers for the fulfilment or non-fulfilment of the covenants and obligations of the Contractor under the Subcontracts and the Contractor hereby agrees to indemnify and hold harmless the Owner from and against any and all claims, proceedings, actions, demands, damages, losses, costs and expenses whatsoever (including legal fees and disbursements on a substantial indemnity basis) incurred or suffered by the Owner in respect of any such covenants or obligations of the Contractor made against the Owner by any Subcontractor or Supplier."

3.7.9 ADD the following as new paragraph 3.7.9:

"3.7.9 The Contractor shall ensure that each Subcontract permits the Contractor freely to assign, charge or otherwise encumber or grant a security interest in the Subcontract to the Owner or as it may direct and that each Subcontractor and Supplier agrees that the Owner, upon delivering a notice (the "Owner Enforcement Notice") to the Subcontractor or Supplier that it is entitled to enforce and is enforcing its remedies against the Contractor under the Contract, shall be entitled to:

(a) proceed in place of the Contractor with construction of the Project, whether itself or by a receiver or receiver and manager, and to enjoy all of the right, title, benefit and interest of the Contractor under the Subcontract; or

(b) assign the Subcontract to a replacement contractor appointed by the Owner or to a purchaser of the Project."

3.7.10 ADD the following as new paragraph

"3.7.10 The Contractor agrees that any of the Work contemplated by this Agreement that is within the trade jurisdiction of the United Brotherhood of Carpenters and Joiners of America (the "Carpenters Union") shall only be performed by members of the Carpenters Union. The Contractor shall provide the Customer with such certifications and information (including details of the value and cost of labour) regarding the Work that is or is asserted to be within the trade jurisdiction of the Carpenters Union as Customer may from time to time request in writing. In the event that Contractor discovers that any part of the Work within the trade jurisdiction of Carpenters Union has been performed by anyone other than members of the Carpenters Union (whether by the Contractor, and Subcontractor or any other person), the Contractor shall immediately notify the Customer in writing. The Contractor further agrees to indemnify the Owner and Customer and each of their respective affiliates against any and all claims (which shall include all expenses on account of legal fees) arising from the performance of any Work within the trade jurisdiction of the Carpenters Union by persons who are not members of that union."

GC 3.8 Labour and Products

3.8.3 DELETE paragraph 3.8.3 and REPLACE it with the following:

"3.8.3 The Contractor shall (i) maintain good order and discipline among the Contractor's employees, Subcontractors, and Suppliers engaged on the Work, (ii) ensure that the Contractor, Subcontractors, and Suppliers shall not employ any one not skilled in the tasks assigned or who is unsatisfactory to the Owner, acting reasonably, and (iii) ensure that all Subcontractors are certified with the authority having jurisdiction in the Place of the Work and carry valid certificates evidencing such certification at all times while engaged on the Work."

GC 3.12 Cutting and Remedial Work

3.12.3 ADD the words "(other than Suppliers or Subcontractors)" immediately following the words "other contractors" in paragraph 3.12.3.

GC 5.1 Financing Information Required of Owner

GC 5.1 DELETE GC 5.1 in its entirety and REPLACE it with the following:

"**GC 5.1 FINANCIAL INFORMATION**

5.1.1 Prior to commencing the Work, the Contractor shall provide the Owner with all information as may be required by the Owner to establish the net worth of the Contractor and to understand the corporate structure of the Contractor and its affiliates."

GC 5.2 Applications for Progress Payment

5.2.6 ADD the following at the end of paragraph 5.2.6:

"which statement shall include details of any variances from the Construction Budget and an explanation thereof, details as to the cost to complete the Work and such other information as the

Owner may reasonably require. The Contractor shall submit with each application for progress payment after the first application a Statutory Declaration in the form as provided by the Owner and a clearance letter or certificate from the authority governing workplace safety and insurance for the Place of the Work evidencing the Contractor's good standing with such authority as at the date of the application for payment".

GC 5.4 Substantial Performance of the Work

5.4.2.2 DELETE paragraph 5.4.2.2 in its entirety and REPLACE it with the following:

".2 state in a certificate the date that the Contract or designated portion thereof is substantially performed in accordance with paragraph (a) of the definition of "Substantial Performance of the Work" and issue a copy of that certificate to each of the Owner and the Consultant."

5.4.3 DELETE paragraph 5.4.3 in its entirety and REPLACE it with the following:

"5.4.3 Immediately following the issuance by the Consultant of a certificate in accordance with paragraph 5.4.2.2, the Contractor shall, as applicable to the Place of the Work:

(a) publish a copy of the certificate in a construction trade newspaper in the Province of the Place of the Work (upon publication, the Contractor shall provide the Consultant and the Owner with a certificate of publication from the construction trade newspaper); or

(b) post a copy of the certificate in a prominent place on the Project, or

(c) do such other act as is required by the lien legislation for the Place of the Work to initiate the requisite time period prior to the expiration of the holdback period."

GC 5.5 Payment of Holdback upon Substantial Performance of the Work

5.5.3 DELETE paragraph 5.5.3 in its entirety.

GC 5.6 Progressive Release of Holdback

5.6.1 DELETE the first sentence of paragraph 5.6.1 and REPLACE it with the following:

"5.6.1 In the common law jurisdictions, where legislation permits and upon receipt of a completed application by the Contractor, the Consultant may certify that the work of a Subcontractor has been totally performed to the Consultant's satisfaction prior to the Substantial Performance of the Work. In such event, the Owner shall pay the Contractor the holdback retained for such Subcontractor following the expiration of the statutory limitation period for such Subcontractor stipulated in the lien legislation applicable to the Place of the Work. The Contractor must, when applying for a release of holdback retained for a Subcontractor, provide the Consultant and the Owner with:

(a) a certified copy of the contract between the Contractor and Subcontractor so that the extent of the work done by the Subcontractor can be assessed;

(b) details of the extent of all additions to, deletions from or revisions to the work done by the Subcontractor;

(c) a statement based on the schedule of values for the relevant portion of the Work together with details of any variances from the Construction Budget and an explanation thereof;

(d) a certificate of publication with respect to a certificate of Substantial Performance relating to the work performed by the Subcontractor in accordance with paragraph 5.4.3;

(e) a statutory declaration of the Contractor confirming that all amounts owing to the relevant Subcontractor for labour, subcontracts, Products, construction machinery and equipment other than the applicable holdback or amounts identified as being in dispute have been paid in full;

(f) a letter or certificate from the authority governing workplace safety and insurance for the Place of the Work evidencing the Subcontractor's good standing with such authority as at the date of the application for release; and

(g) evidence satisfactory to the Consultant and the Owner that there are no liens registered against or otherwise claimed in respect of any portion of the Project."

GC 5.7 Final Payment

5.7.1 DELETE paragraph 5.7.1 and REPLACE it with the following:

"5.7.1 When the Contractor has achieved Completion of the Work, the Contractor shall submit an application for final payment. The Contractor must, when applying for final payment, provide the Consultant with:

(a) a statement based on the schedule of values for the relevant portion of the Work together with details of any variances from the Construction Budget and an explanation thereof;

(b) a statutory declaration of the Contractor confirming that all accounts for labour, subcontracts, Products, construction machinery and equipment, and amounts owing to Subcontractors and Suppliers and other indebtedness incurred by the Contractor in the Completion of the Work, other than amounts properly retained as a holdback or identified as being in dispute, have been paid in full;

(c) a letter or certificate from the authority governing workplace safety and insurance for the Place of the Work evidencing the Contractor's good standing with such authority as at the date of the application for final payment; and

(d) evidence satisfactory to the Consultant and the Owner that there are no liens registered against or otherwise claimed in respect of any portion of the Project."

5.7.4 DELETE the number "5" in the second line of paragraph 5.7.4 and REPLACE it with the number "21".

GC 6.1 Owner's Right to Make Changes

6.1.2 ADD at the end of paragraph 6.1.2 the following:

"This requirement is of the essence and it is the express intention of the parties that any request by the Contractor for a change in the Contract Price and/or the Contract Time shall be barred unless there has been strict compliance with the requirements of this Part 6 – CHANGES IN THE WORK. No course of conduct or dealing between the parties, no express or implied acceptance of alterations or additions to the Work and no interpretation that the Owner has been unjustly enriched by any

alteration or addition to the Work (whether in fact there is any such unjust enrichment or not) shall be the basis of a request for additional payment under this Contract or a request for any extension of the Contract Time. Any Change Order or Change Directive shall clearly set out what, if any, extension of the Contract Time is anticipated as a result thereof and failing the inclusion of same, the Contractor shall be barred from making a request for extension of the Contract Time in respect thereof."

6.1.3 ADD the following as new paragraph 6.1.3:

"6.1.3 In the event of a Change Order or a Change Directive, the Contract Price shall be increased by the incremental Actual Subcontract Costs, if any, required to be incurred as a result of such Change Order or Change Directive and by an amount equal to 10% of such incremental costs, representing a reasonable allowance for additional overhead and profit associated with such Change Order or Change Directive. If the Change Order or Change Directive will result in a decrease in the Actual Subcontract Costs, the Contract Price shall be decreased by the amount of such decrease."

GC 6.2 Change Order

6.2.1 DELETE the words "method of adjustment or" in the second and third lines of paragraph 6.2.1.

ADD the words "in accordance with paragraph 6.1.3," immediately following the words "Contract Price, if any," in the third line of paragraph 6.2.1.

GC6.3 Change Directive

6.3.6 ADD the words "in accordance with paragraph 6.1.3" immediately following the word "determined" in the first line of paragraph 6.3.6.

DELETE the words "and as follows:" in the third line and REPLACE it with ".".

DELETE paragraphs 6.3.6.1, 6.3.6.2 and 6.3.6.3.

6.3.7 ADD the words "or Change Order" immediately following the words "Change Directive" in the first line of paragraph 6.3.7.

GC 6.5 Delays

6.5.1 ADD the word "materially" immediately before the word "delayed" in the first line of paragraph 6.5.1.

6.5.2 ADD the word "materially" immediately before the word "delayed" in the first line of paragraph 6.5.2.

6.5.3 DELETE paragraph 6.5.3 in its entirety and REPLACE it with the following:

"6.5.3 If the Contractor is delayed in the performance of the Work by labour disputes (other than labour disputes resulting from the actions of the Contractor), strikes, lock-outs decreed or recommended for its members by a recognized contractors' association of which the Contractor is a member or to which the Contractor is otherwise bound), fire, unusual delay by common carriers or unavoidable casualties, abnormally adverse weather conditions, or without limit to any of the foregoing, by a cause beyond the Contractor's control (other than lack of financial resources or one resulting from a default or breach of Contract by the Contractor), then the Contract Time shall be

extended for such reasonable time as the Consultant may recommend in consultation with the Contractor. The extension of time shall not be less than the time lost as the result of the event causing the delay, unless the Contractor agrees to a shorter extension. The Contractor shall not be entitled to payment for costs incurred by such delays unless such delays result from actions by the Owner, Consultant or anyone employed or engaged by them directly."

GC 7.1 Owners Right to Perform the Work, Stop the Work or Terminate the Contract

7.1.2 DELETE paragraph 7.1.2 and REPLACE it with the following:

"7.1.2 If the Contractor neglects to prosecute the Work properly or in a timely manner or otherwise fails to comply with the requirements of the Contract, the Owner may give the Contractor Notice in Writing that the Contractor is in default of the Contractor's contractual obligations and instruct the Contractor to correct the default in the five Working Days immediately following the receipt of such Notice in Writing."

7.1.5.3 DELETE the words "the difference" at the end of paragraph 7.1.5.3 and REPLACE them with the words "on the expiry of the warranty period specified in paragraph 12.3.1 for that portion of the Work performed by the Contractor, provided that such payment shall be made only in accordance with the requirements set out in GC 5.7 - FINAL PAYMENT".

7.1.5.4 DELETE the words "the difference." at the end of paragraph 7.1.5.4 and REPLACE them with the words "for that portion of the Work performed by the Contractor, provided that such payment shall be made only in accordance with the requirements set out in GC 5.7 - FINAL PAYMENT, and".

7.1.5.5 ADD the following as new paragraph 7.1.5.5:

".5 give notice to all Suppliers and Subcontractors under Subcontracts that have been assigned to the Owner in accordance with paragraph 3.7.7 that the Owner is exercising its right to assume all of the rights and to perform all of the obligations of the Contractor under such Subcontracts and directing the Subcontractors and Suppliers to disregard any notices or instructions from the Contractor from and after the date of such notice from the Owner, and"

7.1.5.6 ADD the following as new paragraph 7.1.5.6:

".6 if as a result of such termination, the Work is not completed within the Contract Time, charge the Contractor for, and the Contractor shall pay to the Owner, the full profit which the Owner would have earned from the Project if the Work had been completed within the Contract Time and such other damages, losses and costs as the Owner may have sustained as a result of the delay of Completion of the Work."

GC 7.2 Contractor's Right to Stop the Work or Terminate the Contract

7.2.3.1 DELETE paragraph 7.2.3.1 in its entirety.

7.2.3.4 DELETE from paragraph 7.2.3.4 the words ", except for GC 5.1 - FINANCING INFORMATION REQUIRED OF THE OWNER,".

7.2.4 DELETE paragraph 7.2.4 in its entirety and REPLACE it with the following:

"7.2.4 The Contractor's Notice in Writing to the Owner provided under paragraph 7.2.3 shall advise that if the correction of the default is not commenced within five Working Days following receipt of the Notice in Writing, the Contractor may, without prejudice to any other right or remedy the Contractor may have, suspend the Work or terminate the Contract."

7.2.5 DELETE the words "reasonable profit" from paragraph 7.2.5 and REPLACE them with the words "the Contractor's reasonable fee and overhead payable to the end of the month in which the Contract is terminated,".

GC 8.1 Authority of the Consultant

8.1.2 DELETE paragraph 8.1.2 and REPLACE it with the following:

"8.1.2 If a dispute arises under the Contract in respect of a matter in which the Consultant has no authority under the Contract to make a finding, the procedures set out in GC 8.2 - NEGOTIATION, MEDIATION, AND ARBITRATION and GC 8.3 - RETENTION OF RIGHTS apply to that dispute with the necessary changes to detail as may be required."

8.1.3 DELETE the last sentence of paragraph 8.1.3 and REPLACE it with the following:

"8.1.3 If it is subsequently determined that such instructions were in error or at variance with the Contract Documents, the Owner shall pay the Contractor the increased costs, if any, incurred by the Contractor in carrying out such instructions which the Contractor was required to do beyond what the Contract Documents correctly understood and interpreted would have required, including increased costs, if any, resulting from the interruption of the Work. All such increased costs shall be substantiated by evidence satisfactory to the Owner, acting reasonably."

GC 8.2 Negotiation, Mediation, and Arbitration

8.2.1 DELETE paragraph 8.2.1 in its entirety.

8.2.4 DELETE paragraph 8.2.4 in its entirety.

8.2.5 DELETE paragraph 8.2.5 in its entirety.

8.2.6 DELETE paragraph 8.2.6 and REPLACE it with the following:

"8.2.6 If the dispute has not been resolved within 10 Working Days after receipt of a Notice in Writing delivered pursuant to paragraph 8.2.2, either party may refer the dispute to be finally resolved by arbitration under the latest edition of the CCDC-40 Rules for Mediation and Arbitration of Construction Disputes. The arbitration shall be conducted in the jurisdiction of the Place of the Work."

GC 9.1 Protection of Work and Property

9.1.1.2 ADD the words "(other than Suppliers or Subcontractors)" immediately following the words "other contractors" in paragraph 9.1.1.2.

GC 9.2 Toxic and Hazardous Substances and Materials

9.2.1 DELETE paragraph 9.2.1 and REPLACE it with the following:

"9.2.1 For the purposes of applicable legislation related to toxic and hazardous substances, the Owner shall be deemed to have had control and management of the Place of the Work with respect to existing conditions up to but excluding the date of commencement of the Work and the Contractor shall be deemed to have control and management of the Place of the Work from and after the date of commencement of the Work."

9.2.2 DELETE paragraph 9.2.2 in its entirety.

9.2.3 ADD at the end of paragraph 9.2.3 the following:

"The Contractor shall take all reasonable steps to ensure that no person suffers injury, sickness or death and that no property is damaged or destroyed as a result of exposure to, or the presence of, toxic or hazardous substances at the Place of the Work on or after the date of commencement of the Work."

9.2.4 ADD at the end of paragraph 9.2.4 the following:

"The Contractor shall be responsible for taking all necessary steps, in accordance with applicable legislation in force at the Place of the Work, to dispose of, store or otherwise render harmless toxic or hazardous substances at the Place of the Work on or after the date of commencement of the Work other than any such toxic or hazardous substances which are present at the Place of the Work as a result of the wilful acts or negligence of the Owner, its agents or any persons for whom the Owner is responsible in law."

9.2.5.2 DELETE the words "which were not brought to the Place of the Work by the Contractor or anyone for whom the Contractor is responsible and which were not disclosed by the Owner or which were disclosed but have not been dealt with as required under paragraph 9.2.4".

9.2.6 DELETE paragraph 9.2.6 and REPLACE it with the following:

"9.2.6 If the Owner and Contractor do not agree on the existence or significance of any toxic or hazardous substances, or whether the toxic or hazardous substances were present at the Place of the Work prior to the commencement of the Work or are present at the Place of the Work as a result of the wilful acts or negligence of the Owner, its agents or any persons for whom the Owner is responsible in law, the Owner shall retain and pay for an independent qualified expert to investigate and determine such matters. The expert's report shall be delivered to the Owner and the Contractor."

9.2.7 DELETE paragraph 9.2.7 and REPLACE it with the following:

"9.2.7 If the Owner and Contractor agree or if the expert referred to in paragraph 9.2.6 determines that the toxic or hazardous substances were present at the Place of the Work prior to the commencement of the Work or are present at the Place of the Work as a result of the wilful acts or negligence of the Owner, its agents or any persons for whom the Owner is responsible in law, the Owner shall promptly at the Owner's own expense:

.1 take all necessary steps, in accordance with applicable legislation in force at the Place of the Work, to dispose of, store or otherwise render harmless the toxic or hazardous substances;

.2 reimburse the Contractor for the reasonable costs of all steps taken pursuant to paragraph 9.2.5; and

.3 extend the Contract time for such reasonable time as the Consultant may recommend in consultation with the Owner, the Contractor and the expert referred to in 9.2.6 and reimburse the Contractor for reasonable direct costs incurred as a result of the delay."

9.2.8 DELETE paragraph 9.2.8 and REPLACE it with the following:

"9.2.8 If the Owner and Contractor agree or if the expert referred to in paragraph 9.2.6 determines that the toxic or hazardous substances were not present at the Place of the Work prior to the commencement of the Work or are not present at the Place of the Work as a result of the wilful acts or negligence of the Owner, its agents or any persons for whom the Owner is responsible in law, the Contractor shall promptly at the Contractor's own expense:

.1 take all necessary steps, in accordance with applicable legislation in force at the Place of the Work, to safely remove and dispose of the toxic or hazardous substances;

.2 make good any damage to the Work, the Owner's property or property adjacent to the place of the Work as provided in paragraph 9.1.3 of GC 9.1— PROTECTION OF WORK AND PROPERTY;

.3 reimburse the Owner for reasonable costs incurred under paragraph 9.2.6; and

.4 indemnify the Owner as required by GC 12.1 - INDEMNIFICATION."

GC 9.3 Artifacts and Fossils

9.3.2 ADD the words "and the Owner" after the word "Consultant" in the second line of paragraph 9.3.2.

GC 9.4 Construction Safety

9.4.1 DELETE the words "Subject to paragraph 3.2.2.2 of GC 3.2 - CONSTRUCTION BY OWNER OR OTHER CONTRACTORS" in the first line of paragraph 9.4.1.

GC 9.5 Mould

9.5.3 DELETE paragraph 9.5.3 and REPLACE it with the following:

"9.5.3 If the Owner and Contractor agree, or if the expert referred to in paragraph 9.5.1.3 determines, that the presence of mould was not caused by the Contractor's operations under the Contract, the Owner shall promptly, at the Owner's own expense:

.1 take all reasonable and necessary steps to safely remediate or dispose of the mould, and

.2 reimburse the Contractor for the reasonable cost of taking the steps under paragraph 9.5.1.2 and making good any damage to the Work as provided in paragraph 9.1.4 of GC 9.1 -PROTECTION OF WORK AND PROPERTY, and

.3 extend the Contract Time for such reasonable time as the Consultant may recommend in consultation with the Owner, the Contractor and the expert referred to in paragraph 9.5.1.3 and reimburse the Contractor for reasonable direct costs incurred as a result of the delay."

GC 10.2 Laws, Notices, Permits and Fees

10.2.2 DELETE paragraph 10.2.2 and REPLACE it with the following:

"10.2.2 The Owner shall obtain and pay for development approvals, the building permit, permanent easements, and rights of servitude."

10.2.3. DELETE paragraph 10.2.3 and REPLACE it with the following:

"10.2.3 Except for that which is the responsibility of the Owner under paragraph 10.2.2, the Contractor shall be responsible for all permits, licenses, inspections and certificates necessary to achieve Completion of the Work. The Contract Price includes the costs of these permits, licenses, inspections and certificates and their procurement."

10.2.5 DELETE paragraph 10.2.5 and REPLACE it with the following:

"10.2.5 The Contractor shall review the Contract Documents. If it should come to the attention of the Contractor that the Contract Documents are not in compliance with the applicable laws, ordinances, rules, regulations, or codes relating to the Work or if, subsequent to the date of bid closing, changes are made to the applicable laws, ordinances, rules, regulations or codes which require modifications to the Contract Documents or changes to the Contract Documents are required for any other reason by the authorities having jurisdiction, the Contractor shall notify the Consultant and the Owner in writing requesting direction immediately upon such non-compliance, modification or change becoming known to the Contractor. The Consultant will make changes to the Contract Documents in accordance with GC 6.1 – OWNER'S RIGHT TO MAKE CHANGES, GC 6.2 - CHANGE ORDER and GC 6.3 - CHANGE DIRECTIVES."

GC 10.3 Patent Fees

10.3.2 DELETE paragraph 10.3.2 in its entirety.

GC 11. 1 Insurance

11.1.1.1 DELETE paragraph 11.1.1.1 and REPLACE it with the following:

".1 General Liability Insurance:

General liability insurance shall be in the name of the Contractor and include the Owner, Manager, and other designates as Owner may reasonably require and the Consultant as additional insureds and shall be with limits of not less than $5,000,000 per occurrence and have a deductible not exceeding $25,000. The insurance coverage shall not be substantially less than the insurance required by the Insurance Bureau of Canada Form 2100 ("IBC 2100"), or its equivalent replacement, provided that IBC 2100 shall contain the latest edition of the relevant CCDC endorsement form and include cross liability and severability of interests clause, non-owned automobile, limited pollution, coverage for damage to remaining structure and not contain an exclusion for explosion, blasting and undercutting. General liability insurance shall be maintained from the date of commencement of the Work until one year from the date of Substantial Performance of the Work. Liability coverage shall be provided for completed operations hazards from the date of Substantial Performance of the Work, as set out in the certificate of Substantial Performance of the Work, on an ongoing basis for a period of six years following Substantial Performance of the Work."

11.1.1.4 DELETE paragraph 11.1.1.4 and REPLACE it with the following:

".4 Builder's Risk insurance, or an Installation Floater if value of the Work is equal to or less than Five Million ($5,000,000), and shall be in the joint names of the Contractor, the Owner, Subcontractors and Consultant insuring a provisional amount that is not less than the full value of the Work at risk from time to time and the full value, as stated in the Supplementary Conditions, of Products that are specified to be provided by the Owner for incorporation into the Work, plus 10% and with a deductible not exceeding $25,000. The insurance shall include Owner as first loss payee with respect to loss arising from the Work and such coverage shall contain a joint loss agreement, extra expense, expediting expense and by-laws coverage, **[mortgagee clause]** and coverage for flood and earthquake. This coverage shall be provided from the date of commencement of the Work until the earliest of:

(1) 10 calendar days after the date of Substantial Performance of the Work; and
(2) on prior written consent from the Owner regarding the commencement of use or occupancy of any part or section of the Work"

11.1.1.5 DELETE paragraph 11.1.1.5 and REPLACE it with the following:

".5 Boiler and machinery insurance shall be in the joint names of the Contractor, the Owner, Subcontractors and the Consultant for not less than the replacement value of the boilers, pressure vessels and other insurable objects forming part of the Work and is to include coverage for testing and commissioning and include an extension of the equipment is put to use prior to completion of the Work. The insurance shall include Owner as first loss payee with respect to loss arising from the Work. The insurance provided shall not be less than the insurance provided by the "Comprehensive Boiler and Machinery Form" and shall be maintained continuously from the start of the Work until 10 days after the date of the final certificate for payment."

11.1.1.8 ADD the following as new paragraph 11.1.1.8:

".8 **General Provisions Regarding the Contractor's Insurance:**

(1) Each policy of insurance maintained by the Contractor shall provide that 60 days' prior written notice be given to the Owner before any policy is cancelled.

(2) The Contractor shall produce a certificate or certificates evidencing the foregoing insurance to the Owner before the Contractor commences any Work under the Contract and from time to time upon request as the Work progresses and shall, upon request, make arrangements to allow the Owner to review the original insurance policies.

(3) All such policies, with the exception of coverage noted in 11.1.1.2, shall contain a waiver of subrogation rights which the insurers may have against the Owner, the Manager, the Contractor, the Consultant and those for whom such parties are responsible at law, and the policies in 11.1.1.4 and 11.1.1.5 shall additionally waive subrogation against the Subcontractor. In all cases such waivers apply whether the damage is caused by the act, omission or negligence of any of such persons."

GC 11.2 Contract Security

11.2.1 DELETE paragraph 11.2.1 and REPLACE it with the following:

"11.2.1 The Contractor, prior to commencement of the Work, shall provide to the Owner the following guarantee bonds:

(a) a labour and material bond in an amount equal to not less than 50% of the Contract Price; and

(b) a performance bond in an amount not less than 50% of the Contract Price.

The Contractor will pay the premium for such bonds unless otherwise specified."

11.2.2 DELETE paragraph 11.2.2 and REPLACE it with the following:

"11.2.2 Such bonds shall be issued by a duly licensed surety company authorized to transact a business of suretyship in the province or territory of the Place of the Work and shall be acceptable to the Owner. Such bonds shall contain a multiple obligee rider or endorsement in favour of the Owner and any other parties designated by the Owner. All bonds shall be for a term expiring no earlier than 12 months after the date that Substantial Performance of the Work is required to be attained pursuant to paragraph 1.3 of Article A-1 of the Agreement and shall be maintained in good standing until such date. In the event of any adjustment in the Contract Price in accordance with paragraph 4.5 of Article A-4 in connection with any Change Order or Change Directive, the Contractor shall arrange for supplementary or replacement bonds to be provided to the Owner in accordance with paragraph 11.2.1 and this 11.2.2 to reflect the adjusted Contract Price or Subcontract price as the case may be. The form of all bonds shall be in accordance with the latest edition of the CCDC approved form of bonds and shall be otherwise acceptable to the Owner, acting reasonably."

GC 12.1 Indemnification

12.1.1 DELETE paragraph 12.1.1 and REPLACE it with the following:

"12.1.1 Without restricting the Contractor's obligation to indemnify as described in paragraph 12.1.4, the Contractor shall indemnify and hold harmless the Owner and the Consultant, their respective agents and employees from and against all claims, demands, losses, costs, damages, actions, suits or proceedings (hereinafter called "Claims") that arise out of, or are attributable to:

(a) the negligence, omissions or wilful misconduct of the Contractor, its Subcontractors or Suppliers, their respective agents and employees or any persons for whom they are respectively at law responsible; or

(b) any default by the Contractor in the performance of the Work or any of its other obligations under the Contract.

The Contractor shall ensure that the Owner's title to the Place of the Work shall be kept free and clear of construction lien claims and certificates of action arising out of, or attributable to, this Contract. The Contractor agrees at its expense to forthwith remove from the title of the Place of the Work (and in any event within 10 days after the registration thereof) all claims for construction liens and certificates of action that arise out of, or are attributable to, the Work and shall indemnify and save harmless the Owner, its agents and employees from and against all Claims by third parties against the Owner and all costs, losses, damages and expenses incurred by the Owner in connection therewith. The Owner acknowledges and agrees that the foregoing is not intended to limit the Contractor's right to file a claim for construction lien if the Owner does not comply with its payment obligations under this Contract and in such event the Owner agrees to be responsible for all costs and expenses,

including legal fees, incurred by the Contractor and arising from such failure to comply on the part of the Owner. Notwithstanding the foregoing, the Contractor acknowledges that the Owner shall not be obligated to make any progress payment if there are any construction liens or certificates of action registered against title to the Place of the Work."

12.1.2 DELETE paragraph 12.1.2 in its entirety.

12.1.3 DELETE paragraph 12.1.3 and REPLACE it with the following:

"12.1.3 The obligation of the Contractor to indemnify as set forth in paragraph 12.1.1 shall be inclusive of interest and all legal costs."

12.1.4 DELETE paragraph 12.1.4 and REPLACE it with the following:

"12.1.4 The Owner agrees that the Contractor is not liable for Claims arising out of or resulting from exposure to, or the presence of toxic or hazardous substances which were present at the Place of the Work prior to the Contractor commencing the Work or are present at the Place of the Work as a result of the wilful acts or negligence of the Owner, its agents or any persons for whom the Owner is responsible in law. The Contractor shall indemnify and save harmless the Owner, its agents and employees, from and against all Claims arising out of or resulting from exposure to, or the presence of, toxic or hazardous substances at the Place of the Work as a result of (i) the wilful acts or negligence of the Contractor, its Subcontractors or Suppliers or their respective agents or any persons for whom they are respectively responsible in law or (ii) any default by the Contractor in the performance of the Work or any of its other obligations under the Contract. The Contractor shall leave the Place of the Work clean and in full compliance with the requirements of all applicable laws, regulations, Guidelines, directives and by-laws. The foregoing obligations shall not be construed to negate, abridge or reduce other rights or obligations of indemnity otherwise set out in this GC 12.1 - INDEMNIFICATION or which otherwise exist respecting a person or party described in this paragraph."

12.1.5 DELETE paragraph 12.1.5 in its entirety.

12.1.6 DELETE paragraph 12.1.6 and replace it with the following:

"12.1.6 With respect to any claim by the Owner for indemnity or to be held harmless:

.1 Notice in Writing of such claim shall be given within a reasonable time after the facts upon which such claim is based became known;

.2 should the Contractor be required as a result of its obligation to indemnify the Owner to pay or satisfy a final order, judgment or award made against the Owner or to claim liability against another, then the indemnifying or liable party upon assuming all liability for any costs that might result shall have the right to appeal in the name of the party against whom such final order or judgment has been made until such rights of appeal have been exhausted."

GC 12.2 Waiver of Claims

12.2 DELETE GC 12.2 in its entirety.

GC 12.3 Warranty

12.3.7 ADD the following as new paragraph 12.3.7:

"12.3.7 The Contractor agrees to assign to the Owner prior to the expiry of the warranty period in GC 12.3.l the benefit of:

(a) all Products warranties in excess of one year obtained by the Contractor from suppliers of Products for the Project;

(b) all warranties obtained from Subcontractors in excess of one year; and

(c) any other warranties in excess of one year or extended warranties obtained by or on behalf of the Contractor in connection with the Work.

The Contractor shall ensure that the benefit of all such warranties shall be assignable by the Contractor to the Owner or shall name the Owner as a dual obligee."

GC 13 Other Clauses

ADD GC13 – OTHER CLAUSES and new paragraphs 13.1, 13.2, 13.3, 13.4 and 13.5 as follows:

"13.1 The Contractor acknowledges and agrees that the Contractor's willingness to enter into this Contract at the Contract Price is of fundamental importance to the Owner, who would not have entered into this Agreement otherwise.

13.2 The Contractor accepts the relationship of trust and confidence established between it and the Owner by this Agreement. In performing its obligations under this Agreement, the Contractor shall act in good faith and furnish appropriate skill and judgment. The Contractor shall also co-operate with the Consultant and the Owner in furthering the interests of the Owner. The Contractor shall at all times furnish sufficient business administration and superintendence and an adequate supply of workers and materials. The Contractor shall perform the work in an expeditious and economical manner consistent with the best interests of the Owner.

13.3 The Contractor shall perform the Work in a good and workmanlike manner, using new materials, in accordance with all applicable laws and current best practices and standards in the construction industry at the Place of Work. The Contractor acknowledges that both time and quality are of the essence and the Contractor will perform the Work or cause the Subcontractors and Suppliers to perform the work in accordance with the construction schedule, as amended from time to time, and in an expeditious and professional manner.

13.4 The Contractor shall not erect, affix, install or maintain any signs, lettering, identification, promotional or other written materials on the Project or at the Place of Work without the prior written consent of the Owner and only in accordance with all applicable laws.

13.5 The Contractor will participate in: preparing and updating from time to time, the Construction Budget and construction schedules; design meetings and regular progress meetings with the Owner and the Consultant; and expediting applications for and obtaining all permits, licences and approvals, in each case in consultation with the Consultant and the Owner."

Appendix E

Firestop Installation and Specification Guidelines

Presented to: **Bentall Kennedy**
150 King Street West
Toronto, ON
M5H 3T9

November 2018

Prepared by:

The Attain Group Inc.

Document Version Tracking

Version #	Revision Date	Initials
1	October 9, 2018	PB
2	November 21, 2018	PB

Fire Stop Installation and Specification Outline

Objective:

The object of this document is to standardize the installation and provide information on specification guidelines of firestop systems within the Bentall Kennedy premises at 150 King Street in Toronto, to ensure proper fire ratings on all fire rated service openings. This document will outline the product types and manufacturer installation procedures to be used at 150 King Street, as well as provide information concerning firestop systems in general.

Firestop Standards:

- The Ontario Building Code (OBC), Ontario Fire Code and the National Fire Code apply to the use and maintenance of this building.
- The National Building Code (NBC) also applies in all buildings with federal government tenants.
- The OBC requires that building services that penetrate a rated fire separation be sealed by a firestop system, or by means of cast-in-place concrete.
- Sleeves or slots must not be left open except during cable installation and upon completion shall be fire stopped with an approved firestop assembly.
- It is highly recommended that a digital picture be taken of the assembly for proof of completion and to mitigate liability.
- Upon completion, all work will be reviewed to ensure that a proper installation of fire proofing has been completed and that the riser rooms are cleaned.

Firestop Systems:

When referring to firestop systems, the following terms are essentially synonymous:

- Qualified
- Tested
- Listed
- Classified
- Approved

Each term refers to firestopping systems that have been tested by a nationally recognized testing laboratory (NRTL) and certified as compliant with the conditions of individual test standards (different laboratories use different terms).

The Keys to Fire Protection:

One purpose of every major building code is to reduce the threat of fire. The keys to fire protection are:

- Prevention
- Detection
- Suppression
- Compartmentation (containment)

Compartmentation and Firestopping:

Building construction plays a major role in compartmentation. Building codes require fire-rated walls and floors to:

- Isolate the areas in which hazards are likely to exist.
- Subdivide the areas to enhance the protection of lives and property.

Appropriate Systems:

A firestop seal system must provide an appropriate balance between:

- Durability.
- Ease of installation.
- Ease of maintenance.

Firestop product and Methodology:

Bentall Kennedy has approved the firestop assembly provided by HILTI (www.hilti.ca) for use at 150 King Street W in Toronto.

HILTI Fire Protection Specialist:

- If there are additional requirements, you may reach out to a local Hilti Fire Protection Specialist or your account representative at ***1-800-363-4458.***

Assembly Specifications:

a. For "in-curb" cores – UL system for the putty option is **C-AJ-3208** for top side application. Depth of putty will be minimum 1" with minimum 3 ½" mineral wool. See *Appendix 3* for Hilti putty specification. See *Appendix 1* for Hilti Specifications

Figure 1-1. Example of 'in-curb" firestopping

b. For “outside-curb” cores – blank openings to be capped- UL system **C-AJ-0142** with silicone which provides water protection. Requires ½” sealant and 4” of mineral wool. See Appendix 2 for Hilti Specifications.

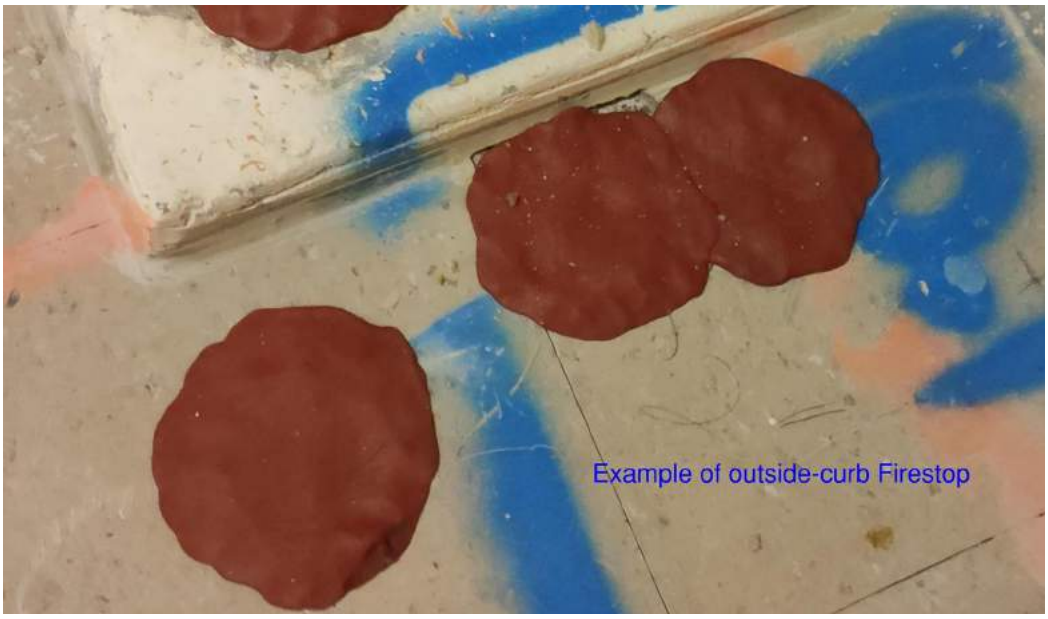

Figure 1-2. Example of “outside curb” firestopping

Appendix 1: In-Curb Firestop Assembly – C-AJ-3208

CAJ 3208

Classified by
Underwriters Laboratories, Inc.
to UL 1479 and CAN/ULC-S115

System No. C-AJ-3208

F Rating – 3 Hr
T Rating – 0 Hr

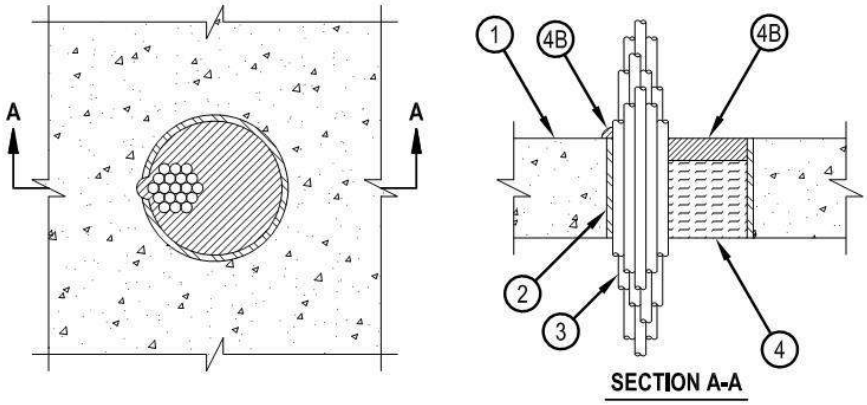

1. Floor or Wall Assembly – Min 4-1/2 in. thick reinforced lightweight or normal weight (100-150 pcf) concrete. Wall may also be constructed of any UL Classified Concrete Blocks*. Max diameter of opening is 6 in.
   See Concrete Blocks (CAZT) category in the Fire Resistance Directory for names of manufacturers.
2. Nonmetallic Sleeve – (Optional)–Nom 6 in. diam (or smaller) Schedule 40 (or heavier) solid or cellular core polyvinyl chloride (PVC) sleeve cast or grouted into floor or wall assembly, flush with floor or wall surfaces.
3. Cables – Aggregate cross-sectional area of bundled cables in opening to be max 60 percent of the cross-sectional area of the opening. The annular space between the cable bundle and the periphery of the opening or sleeve to be min 0 in. (point contact) to max 1 in. Cables to be rigidly supported on both sides of the floor or wall assembly. Any combination of the following types and sizes of cables may be used:
   A. Max 300 pair No. 24 AWG telephone cable with polyvinyl chloride (PVC) insulation and jacket.
   B. Max 750 kcmil single copper connector power cable with thermoplastic insulation and PVC jacket.
   C. Max 7/C No. 12 AWG multiconductor power and control cable with PVC or cross-linked polyethylene (XLPE) insulation and PVC jacket.
   D. Multiple fiber optical communication cable jacketed with PVC and having a max outside diameter of 1/2 in.
   E. Max 3/C No. 12 AWG with bare aluminum ground, PVC insulated steel Metal-Clad cable.
   F. Max 1 in. diam metal clad TEK cable with PVC jacket.
   G. Max 3/C with ground 2/0 AWG copper conductor SER cable with cross-linked polyethylene (XLPE) insulation and polyvinyl chloride (PVC) jacket.
   H. RG/U coaxial cable with polyethylene (PE) insulation and polyvinyl chloride (PVC) jacket having a max outside diameter of ½ in.
4. Firestop System – The firestop system shall consist of the following:
   A. Packing Material – Min 3-1/2 in. thickness of min 4 pcf mineral wool batt insulation firmly packed into opening as a permanent form. Packing material to be recessed from top surface of floor or both sides of wall as required to accommodate the required thickness of fill material.
   B. Fill Void or Cavity Materials* – Putty – Min 1 in. thickness of fill material applied within the annulus, flush with top surface of floor and both surfaces of wall. At point contact location between penetrant and sleeve or concrete, min ½ in. diam bead of fill material applied at bundle/sleeve or bundle/concrete interface on top surface of floor or both surfaces of wall.
   HILTI CONSTRUCTION CHEMICALS, DIV OF HILTI INC – CP618 Firestop Putty Stick

*Bearing the UL Classification Mark

Hilti Firestop Systems

Reproduced by HILTI, Inc. Courtesy of
Underwriters Laboratories, Inc.
January 28, 2003

Appendix 2: Outside-Curb Firestop Assembly C-AJ-0142

UL/cUL SYSTEM NO. C-AJ-0142

BLANK OPENING THROUGH CONCRETE FLOOR/WALL OR BLOCK WALL ASSEMBLY

F-RATING = 3-HR.
T-RATING = 3-HR.

CAJ0142a.010914

TOP VIEW

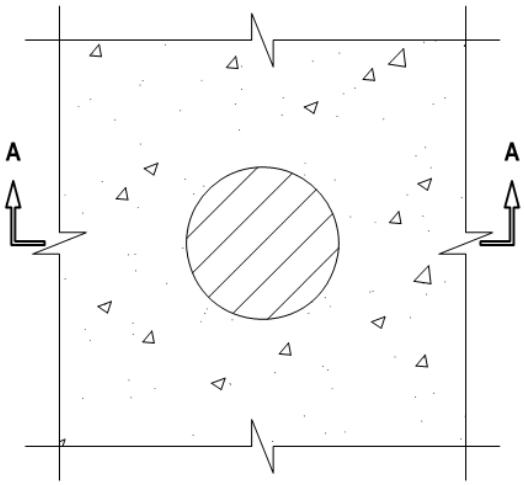

SECTION A-A

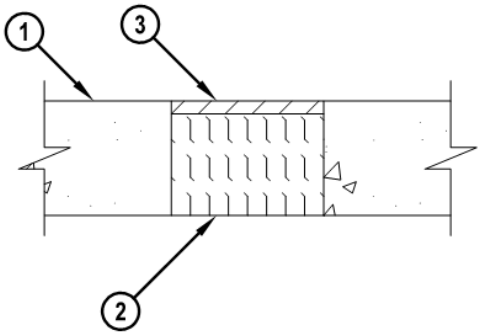

1. CONCRETE FLOOR OR WALL ASSEMBLY (3-HR. FIRE-RATING) :
   A. LIGHTWEIGHT OR NORMAL WEIGHT CONCRETE FLOOR (MINIMUM 4-1/2" THICK).
   B. LIGHTWEIGHT OR NORMAL WEIGHT CONCRETE WALL (MINIMUM 5" THICK).
   C. ANY UL/cUL CLASSIFIED PRECAST (HOLLOW-CORE) CONCRETE FLOOR (MINIMUM 6" THICK).
   D. ANY UL/cUL CLASSIFIED CONCRETE BLOCK WALL.
2. MINIMUM 4" THICKNESS MINERAL WOOL SAFING (MIN. 4 PCF DENSITY) TIGHTLY PACKED. IN HOLLOW-CORE FLOORS MINERAL WOOL TO BE INSTALLED FLUSH WITH BOTTOM SURFACE OF FLOOR.
3. MINIMUM 1/2" DEPTH HILTI CFS-S SILL GG FIRESTOP SILICONE SEALANT OR HILTI CFS-S SIL SL FIRESTOP SILICONE SEALANT (FLOORS ONLY).

NOTES : 1. MAXIMUM DIAMETER OF OPENING = 6".
2. MINIMUM 1/2" DEPTH HILTI CFS-S SIL GG FIRESTOP SILICONE SEALANT IS REQUIRED ON EACH SIDE OF A WALL.

Hilti Firestop Systems	HILTI, Inc. Tulsa, Oklahoma USA (800) 879-8000	Sheet 1 of 1 Scale 11/64" = 1" Date Jan. 09, 2014	Drawing No. CAJ 0142a

Saving Lives through Innovation and Education

Appendix 3: Putty Specification – CP-618

HILTI **Product Information**

Firestop Putty Stick
CP 618

Product description
- An intumescent, non-hardening, firestop putty for cable and pipe penetrations

Product features
- Contains no volatile solvents or asbestos
- Easy to re-penetrate
- Reusable
- Easy to add or remove cables
- Fast installation

Areas of application
- Single or bundled cables
- Non-combustible pipe
- Blank openings

For use with
- Concrete, masonry and gypsum wall assemblies
- Wall and floor assemblies rated up to 3 hours

Examples
- Where telecommunication and data lines penetrate gypsum wall assemblies
- Where steel conduit and EMT penetrate concrete and block wall assemblies
- Where blank openings exist in concrete and block wall assemblies

Installation instructions
- See Hilti Literature or third-party listings for complete application and installation details

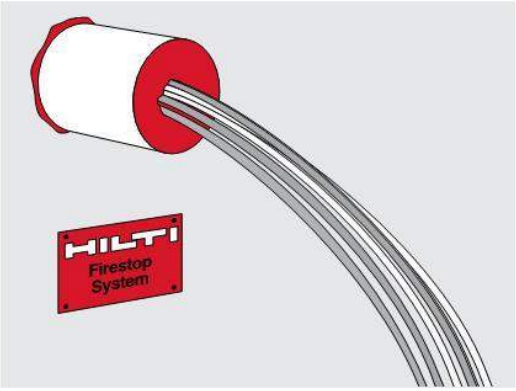

Technical data	
Volume	18 in³
Consistency	Moldable putty
Color	Red
Application temperature	32°F to 104°F (0°C to 40°C)
Curing time	Non-curing
Density	Approx. 1.6 g/cm³
Surface burning characteristics (ASTM E84-96)	Flame Spread: 15 Smoke development: 10
Sound transmission classification (ASTM E 90-97)	49 (Relates to specific construction)
Tested in accordance with	UL 1479 ASTM E 814 ASTM E 84 ASTM G21

*At 73°F (23°C) and 50% relative humidity

CLASSIFIED C UL US FILL, VOID OR CAVITY MATERIAL FOR USE IN THROUGH-PENETRATION FIRESTOP SYSTEMS SEE UL FIRE RESISTANCE DIRECTORY 66Y7

FM APPROVED

03/16 DBS

Hilti Firestop
Saving lives through innovation and education

Hilti. Outperform. Outlast.